

Air motors

For top performance
in demanding applications



Air motor **values and characteristics**

- Air motors are compact and lightweight. An air motor weighs only a quarter as much and occupies only one sixth of the space of an electric motor of equivalent output power. Air motors develop far more power relative to size and weight than most other motor types.
- Air motors can be stalled indefinitely without overheating or sustaining any other damage. They can be started and stopped repeatedly to an unlimited extent.
- Torque, speed and direction of rotation can be changed easily using simple control methods.
- Output inherently adjusts to match the applied load.
- Controllable over a wide speed range.
- Virtually unaffected by hostile environment.
- Smooth start-up to minimize "shock" loading on transmission components.

Our air motors are ATEX Certified, in compliance with the European Union´s ATEX directive 2014/34/EU. For equipment used in potentially explosive environments.

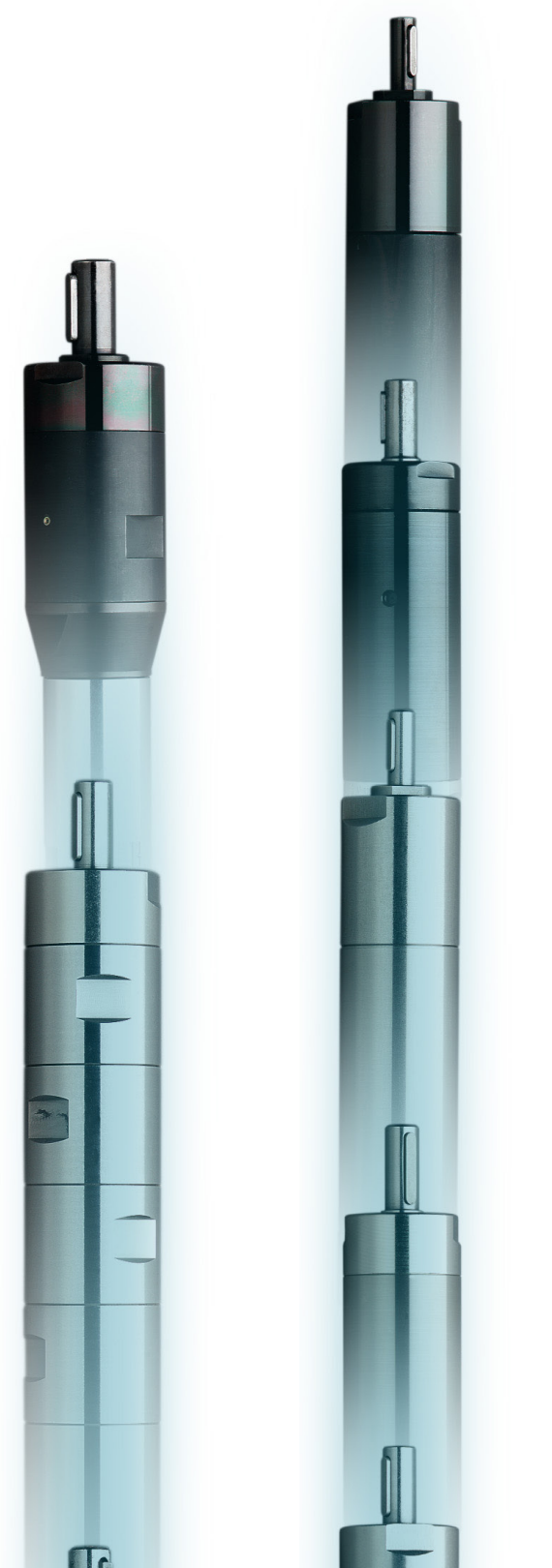

Atlas Copco – air motors

- Leading the industry in development and innovation.
- Offering a comprehensive range of standard air motors.
- A premier supplier of air motors engineered to meet customer requirements.
- Delivering orders, on time, to customer schedules.
- Offering a truly worldwide service.

Atlas Copco air motors –
the natural choice for design engineers in the industries of today and tomorrow.

Select the right motor
and download 3D drawings

Download the dimensional drawings in 2D or 3D available at
www.webbox.atlascopco.com/webbox/dimdrw/index.html
Available formats: PDF - DXF - IGS - STP

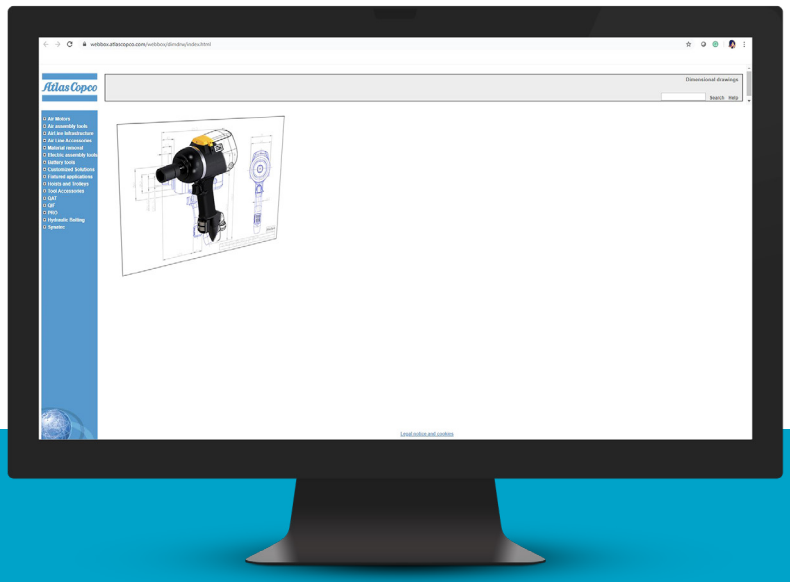

Selecting the right motor has never been easier!

Just enter the required working point for the application
and the most suitable motor will automatically be selected. For the selection use the Atlas Copco selection tool.

Air motor selection program, available at
www.atlascopco.com/airmotors
www.webbox.atlascopco.com



Contents

Using the catalogue 06

Choosing your motor 07

Introducing the air motor 09

Installing your air motor 10

Methods of modifying LZB – LZL motor output 12

Introduction to Air Drive Units 13

- LZB Vane motors
- LZL Vane motors
- TZB Turbine motors
- PZB Piston motors

01. LZB Vane motors 21

- Shaft loading
- Mounting
- Connection
- Hose dimensions
- LZB vane motors: data, specification and performance curves
- Accessories for air motors

02. LZL Vane motors 79

- Shaft loading
- Mounting
- Connection
- Hose dimensions
- LZL Vane motors: data, specification and performance curves
- LZL Vane motor/gear unit combinations
- LZL Air motors: with helical gear units data, specification and performance curves
- Accessories for LZL motors

03. TZB Turbine motors 97

- TZB Turbine motors: data, specification and performance curves

04. PZB Piston motors 103

- PZB Piston motors: data, specification and performance curves
- Shaft loading
- Mounting

ATEX 106

- Explosion prevention guidelines
- ATEX code definition

Using
the catalogue

Motor data, specification and performance curves

For each Atlas Copco motor/gear unit combination the following information is presented in this catalogue.

1. Tabular data – summary of main performance parameters.
2. Dimensional drawings.
3. Performance curves.

Notes on performance data

The performance data stated in this catalogue is valid for an air supply pressure of 6.3 bar (91 psi), gauge.
Air consumption values are for free air delivery – (i.e., the volume the consumed air would occupy if allowed to expand to atmospheric pressure).

The direction of rotation for a motor is always stated looking from the back of the motor.

Figure 7 illustrates clockwise rotation.

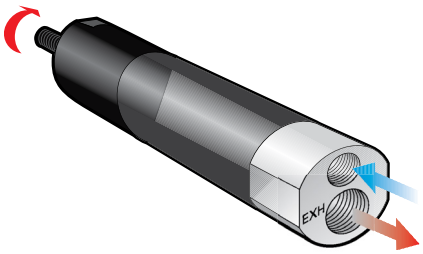

Figure 7

Understanding the performance curves

The output of an air motor is most clearly seen from its performance curves, Figure 8. For each motor/gear unit the power, torque and air consumption are shown as a function of speed.

The diagrams shown apply to an inlet pressure of 6.3 bar, to calculate performance at other pressures refer to page 7 in this catalogue.

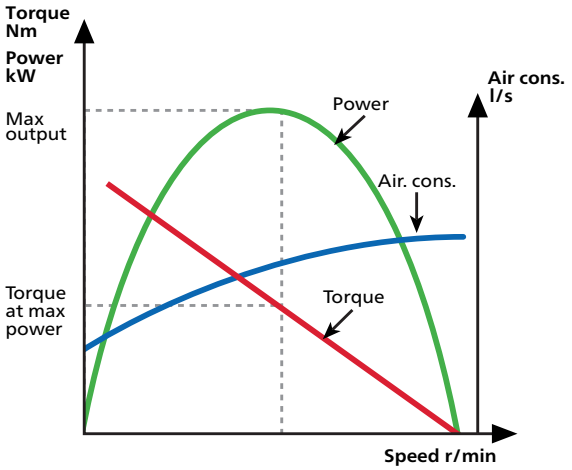

Figure 8

NOTE: The starting torque produced by an air motor is variable and depends on vane position. These diagrams do not indicate the starting torque – this can be obtained from data tables, where the minimum value is shown.

More information about motor selection and installation in the catalogue.

Denominations for LZB, TZB and PZB air motors

Size			Speed designation		
LZB33	-	L	-	AR150	-	11

Type

LZB = Vane motor
TZB = Turbine motor
PZB = Piston motor

L = Lubrification free
LB = Lubrification. Brake module
RL = Lubrification free. stainless steel
RML = Lubrification free,
Stainless steel , stainless steel motor cell

A = Right rotation
AV = Left rotation
AR = Reversible
LR = Low speed

11 = Standard with key
12 = Standard with threads
13 = Standard with splines
14 = Standard with slimmed interface
15 = Standard with slimmed interface
16 = Standard with angle head
20 = Motor prepared flange. IEC
21 = Motor prepared flange. NEMA
50 and up = Released customer specials
001 and up = Prototypes and test batch

Choosing **your motor**

The working point

When selecting an air motor for a certain application, the first step is to establish what is called the "working point". This is the point described by the desired operating speed for the motor and the torque required at that speed.

The wide operating range of the air motor makes it probable that a number of motors could run with the same working point. However as it is most efficient to run an air motor at the speed at maximum output, the motor that produces maximum power nearest to the working point should probably be selected. Other criteria that can influence the choice are minimum starting torque, stall torque and free speed.

The power required at the working point is calculated by:

$$\text{Power} = \pi \frac{\text{x M x n}}{30} \text{ [W]}$$

Where, M = Torque at working point (in Nm)
n = Speed at working point (in r/min)

Example:

A Non-reversible motor is required to run at 300 r/min and produce a torque of 10 Nm. Selection of correct motor size is as follows:
Power required (W) = 3.14 x 10 x 300/30 = 314
From Table 5 the correct size of Non-reversible motor for this application is the LZB 33.

Once the motor size has been identified, simply look at the performance curves for each motor variant and select the one with max. output nearest to the working point. For the above example this would be the LZB33-L-A007-11.

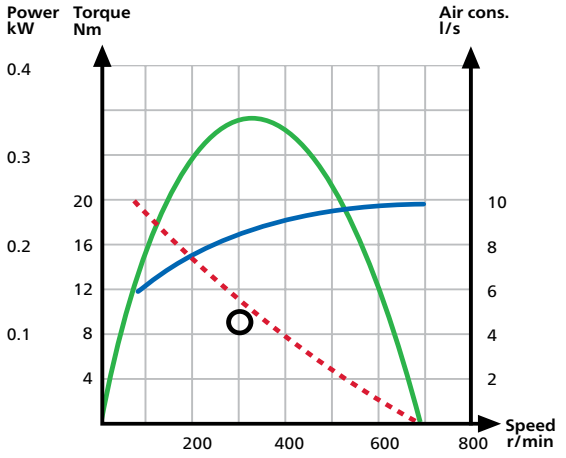

LZB33-L-A007-11

Figure 6

If necessary, one of the flow control methods can be used to modify the output of a motor to meet the working point exactly (Figure 7).

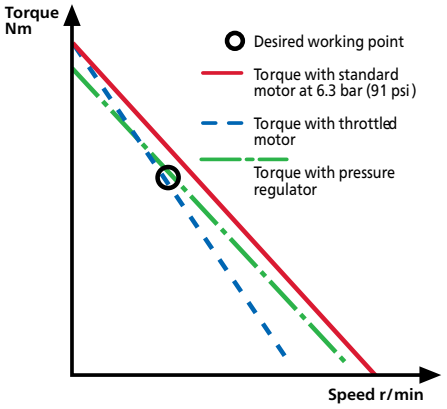

Figure 7

Accelerating a load to speed

Many applications demand that a motor produces a minimum torque at start-up. In these a minimum starting torque, for a given motor, can be looked up in the tabular data. If it is necessary to modify the motor's output, but also maintain a high starting torque, the technique of throttling the air flow should be utilized.

Other applications require a certain stall torque. A motor's stall torque can be calculated by looking up the "torque at maximum output" and multiplying this value by two. Where it is desirable to control the stall torque, the technique of pressure regulation should be used.

Starting torque and stall torque

Certain applications require the acceleration of a load up to a given speed. In these cases, the choice of motor involves complex calculations. It is therefore recommended that you seek guidance from your nearest Atlas Copco representative before proceeding.

Shaft loading

Always ensure shaft loadings are within the stated allowable limits.

Silencing

The noise generated by an air motor is mainly caused by the exhaust air of the motor. The noise level increases with speed and is greatest at the free speed.

All Atlas Copco motors are supplied with a threaded exhaust port which, to reduce noise levels, can accept a screw in silencer. However, an exhaust hose can also be fitted, and when used with a silencer, it can reduce noise levels even further. The effects of employing the various silencing techniques are indicated in tables in chapter Accessories.

Temperature

Atlas Copco air motors can operate reliably in ambient temperatures that range from –20°C (–4°F) to + 60°C (+140°F). However, below ambient temperatures of +5°C (+41°F) the compressed air may need to be dried to avoid freezing problems. Please note it is often possible to operate these motors at much higher temperatures but this should not be attempted without first checking with your local Atlas Copco representative.

Hostile environments

Atlas Copco air motors are found in use in many hostile environments, often with little or no modification. These environments are typified as being: Acidic – Explosive – Radioactive – High temperature – Moist – Dusty – Intense electric fields – Underwater – High humidity. It is also possible to power an air motor with many types of compressed gas, for example nitrogen or natural gas. However, to ensure safe and reliable service, we recommend you always consult your local Atlas Copco representative before using an air motor in a hostile environment.

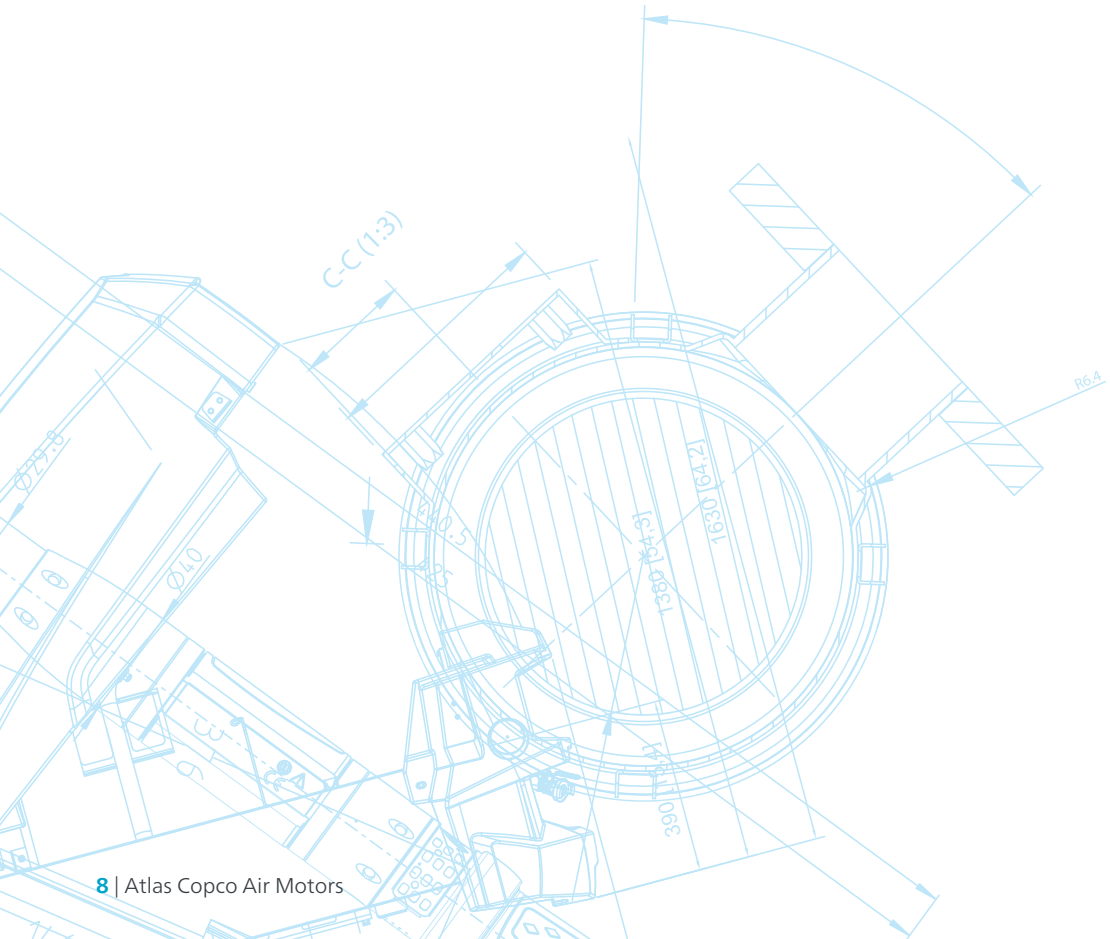

Introducing the **air motor**

The air motor is one of the toughest and most versatile power units available to today's design engineer. It is easy to control over a wide speed range, and it produces maximum torque where it is often most needed – at start up.

The performance of an air motor is dependent on the inlet pressure. At a constant inlet pressure, ungoverned air motors exhibit the characteristic linear output torque/speed relationship. Figure 1.

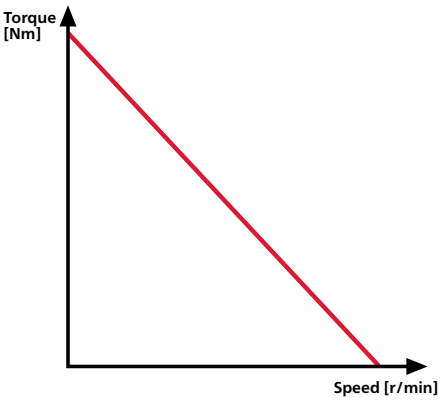

Figure 1

However, by simply regulating the air supply, using the techniques of throttling or pressure regulation, the output of an air motor can easily be modified.

The free speed and torque can be regulated down to 50% for an LZB air motor. The free speed for an LZL can be regulated down to 10% and the torque can be regulated down to 20%. The shaded areas in Figure 2 illustrate this.

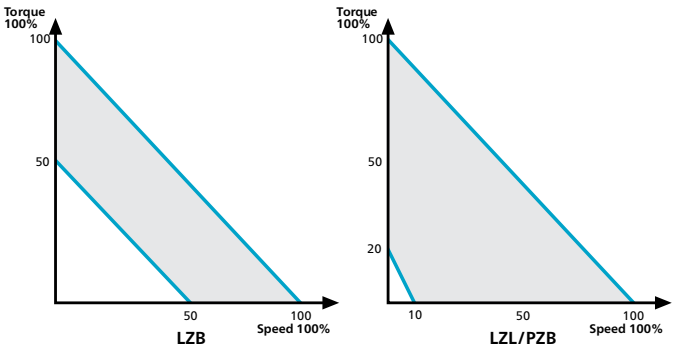

Figure 2

It should be noted that all vane air motors produce a variable starting torque, due to the position of the vanes in the motor when it is started. The variation differs between motor types and must be checked on an individual basis.

The power that an air motor produces is a function of torque and speed. All ungoverned air motors produce the same characteristic power curve, with maximum power occurring at around 50% of the free speed. The torque produced at this point is often referred to as "torque at maximum output."

The performance curves for an ungoverned air motor operating at a constant air pressure are illustrated in Figure 3.

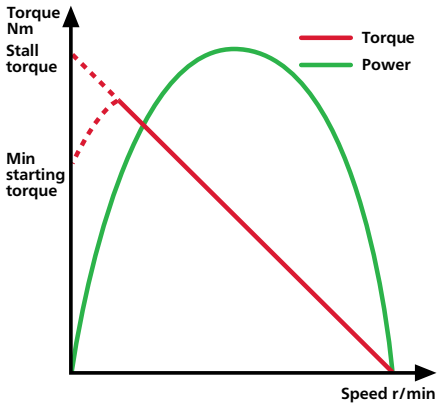

Figure 3

The use of gear units

Air motors operate at high speed and, although they can be controlled over a wide speed range, the output characteristics are not always suitable for the application. To achieve the required output an appropriate gear unit can be selected. The ability to change the output by use of a gear unit is illustrated in Figure 4.

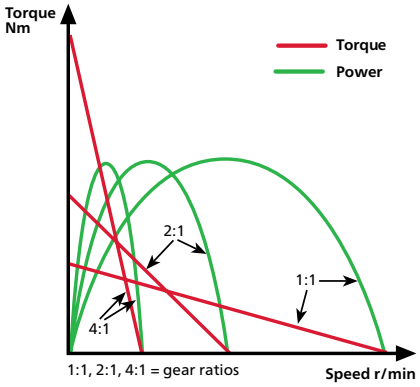

Figure 4

The planetary and helical gear units used by Atlas Copco have a high level of efficiency that can be assumed to be 100%. The power output remains virtually unchanged also when gears are used.

Installing your **air motor**

Air lines

The recommended dimensions of air lines are given in the introductory section to each motor type. Note that exhaust hose is larger than inlet hose.

The recommendations are valid for hose lengths of up to 3 meters. For distances between 3 and 15 meters select a hose diameter one size up, and for distances between 15 and 50 meters select a hose diameter two sizes up.

It is important to note that the output of the motor will be reduced if these guidelines are not followed.

Recommended hose connectors

Because of the compact dimensions of Atlas Copco vane motors, special hose connectors are available with small key width – facilitating easy installation.

The hose connectors can be ordered through your local Atlas Copco representative.

Air preparation

For optimum performance and maximum machine life we recommend the use of compressed air with a maximum dew point of +10°C. We also recommend the installation of an Atlas Copco refrigeration-type air dryer.

To ensure reliable service an air filter and lubricator should be fitted into the inlet air line – within 3 meters from the motor.

It is recommended that a pressure regulator is also incorporated into the air preparation package. This has the function of maintaining the desired working pressure, and can be used to modify the motor's output to meet the needs of the application.

When selecting an air preparation package, ensure all components have sufficient flow capacity to meet the requirements of the motor. The filter shall remove solid particles larger than 15 microns and also remove more than 90 % of liquid water. A typical arrangement of an air preparation installation is shown below, Figure 9.

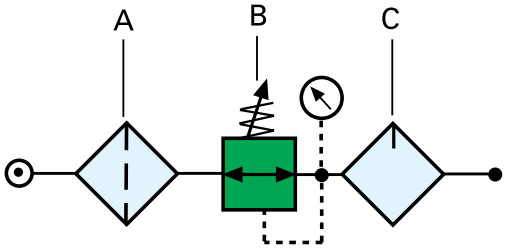

A = Filter
B = Pressure regulator
C = Oil fog lubricatior

Figure 9

Lubrication free vane motors

Atlas Copco's LZB vane motors and LZB stainless steel run with lubrication free vanes as standard.

The LZB motors with lubricated free vanes can still be lubricated, if the application requires it, but is not dependent on lubricated air, as with traditional vanes.

If running a motor with 100% dry air and no lubrication, performance can be reduced depending on model.

The table below shows how reduced lubrication can affect service life and power for a lubricated vane motor.

Lubricant quantity	Lubricant free vanes		Conventional lubricated vanes	
mm^3 oil in m^3	Service life hours	Output power %	Service life hours	Output power %
50	1000 – 3000	100	1000 – 3000	100
10	1000 – 2000	100	500 – 1000	100
1	500 – 1000	85 – 95	200 – 500	90
0.1	500 – 1000	85 – 95	100 – 300	80
0	500 – 1000	85 – 95	10 – 30	30

Directional control valves

These valves are used to start or stop a motor, or to change its direction of rotation. It is most usual to use what is termed a 5/3 valve to control a reversible motor, and a 3/2 valve to control a Non-reversible motor.

The valve designations refer to the number of connection ports and the number of operating positions the valve provides, for a 5/3 valve this is 5-connection ports and 3 positions.

When selecting any control valve it is important to ensure that it has a sufficient flow capacity to supply the requirements of the motor.

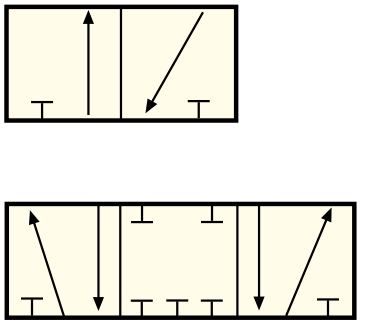

Figure 6

The symbols used to represent these valves in an installation diagram.

Installation examples

Typical installation diagrams for type LZB and LZL air motors, together with their associated control valves, filters, regulators lubricators and silencers.

NOTE: For LZL air motors it is important that an inlet restrictor is placed upstream from the inlet. It must be placed so it does not affect the exhaust at reversible running. This means that it has to be placed before the control valve.

LZB Circuits

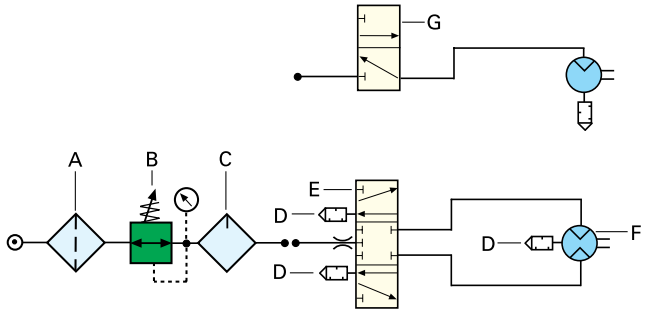

Figure 11

LZL Circuits

Non-reversible duty with 3/2 valve

Reversible duty with 5/3 valve and closed mid position

Reversible duty with 5/3 valve and open mid position

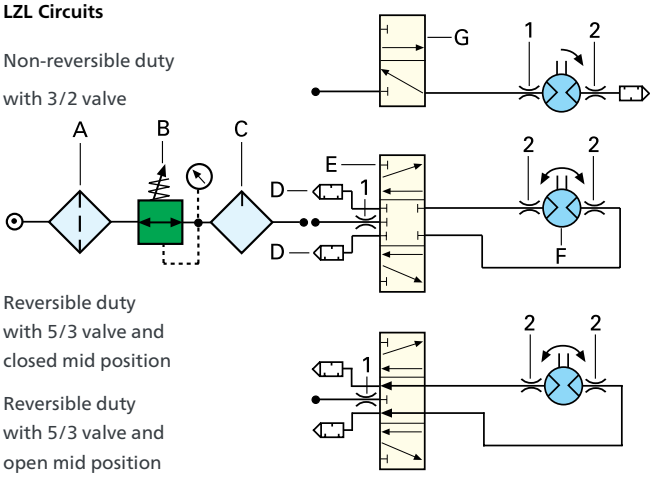

A = Filter
B = Pressure regulator
C = Oil fog lubricator
D = Silencer
E = 5/3 valve
F = Air motor
G = 3/2 valve

1 = Inlet restrictor
2 = Outlet restrictor

Figure 12

A = Filter
B = Pressure regulator
C = Oil fog lubricator
D = Silencer
E = 5/3 valve
F = Air motor

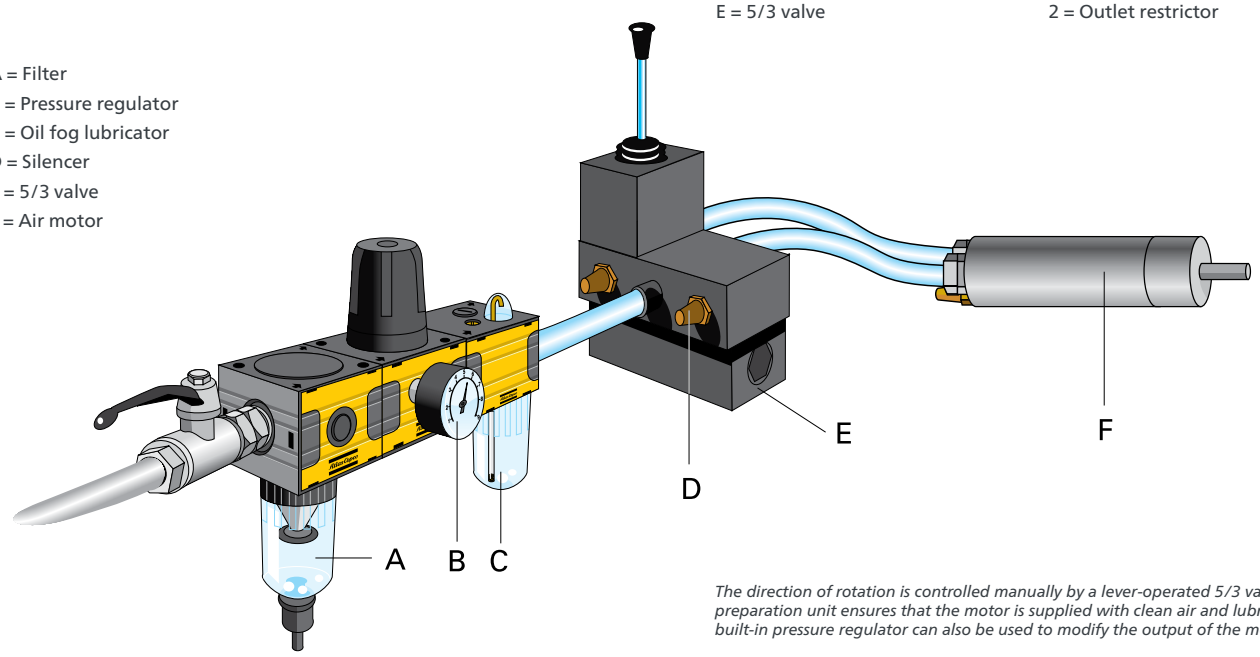

Figure 13

The direction of rotation is controlled manually by a lever-operated 5/3 valve. The air preparation unit ensures that the motor is supplied with clean air and lubrication. The built-in pressure regulator can also be used to modify the output of the motor.

Methods of modifying
LZB – LZL motor output

Throttling

A throttle is usually fitted into the motor´s inlet, although it can also be complemented with some throttling at the exhaust. You should never create a back pressure above 1 bar at the exhaust.

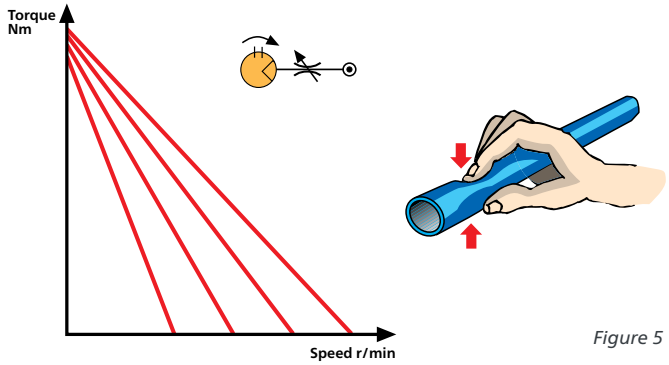

Figure 5

Pressure regulation

When using a pressure regulator it is mostly fitted into the motor´s inlet hose. The use of pressure regulation is ideal when control of the stall torque is required and a high starting torque is not so important, Figure 6.

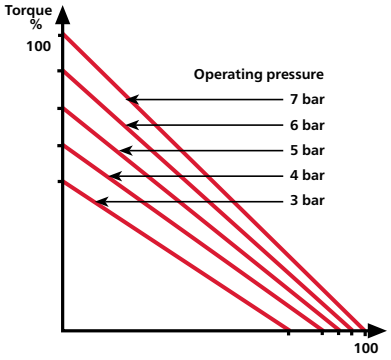

Figure 6

Pressure regulation

Sometimes the motor operates at other supply pressures than 6.3 bar. In these cases the performance of a motor must be re-calculated to ensure the working point can be achieved.

To calculate performance at supply pressures other than 6.3 bar, multiply the data at 6.3 bar by the correction factors shown in table below.

Correction factors					
Air pressure		Output	Speed	Torque	Air consumption
bar	psi				
7	101	1.13	1.01	1.09	1.11
6	87	0.94	0.99	0.95	0.96
5	73	0.71	0.93	0.79	0.77
4	58	0.51	0.85	0.63	0.61
3	44	0.33	0.73	0.48	0.44

It is also easy to calculate the inlet pressure required to achieve a desired working point.

Example:
An LZB22-L-A036-11 is required to run at 1155 r/min and produce 1.2 Nm; calculate the required inlet pressure to achieve this.
For this motor at maximum output the torque is 1.5 Nm and the speed is 1650 r/min.
M_1 = desired torque
n_1 = desired speed
M_2 = torque at maximum output
n_2 = speed at maximum output

Calculate the ratios M_1/M_2 and n_1/n_2
Therefore $M_1/M_2 = 0.8$ and $n_1/n_2 = 0.7$

Apply these values to the diagram in Figure 8 and read off the pressure at the intersection point.
The required inlet pressure is 4.2 bar (61 psi)

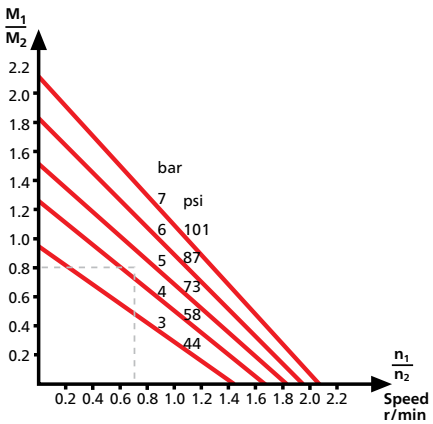

Figure 8

Introduction to **Air Drive Units**



LZB Vane motors – 0.1 kW to 2.8 kW

Type LZB Atlas Copco vane motors are compact in design, light in weight, and available with a host of different gear ratios to meet a variety of speed and torque requirements. They are particularly suitable for building into handheld machines, or indeed any industrial equipment.

Planetary gear units

Atlas Copco planetary gear units are particularly suitable for use with LZB Vane motors. The gear and motor components can be accommodated within a single, extremely compact housing where they provide high torque capacity for their size and exceptional efficiency, Figure 9

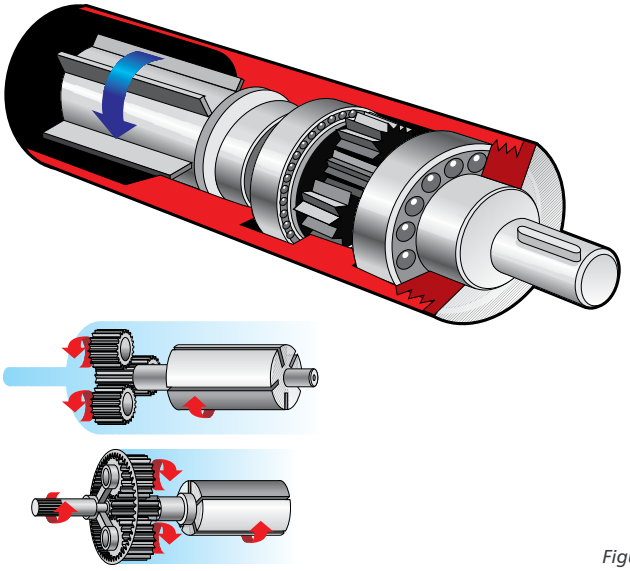

Figure 9

Stainless steel air motors

Atlas Copco's stainless steel motors enlarge the field of applications to areas where the environment is corrosive. This can be in the food processing industries where corrosive detergents are used or in the chemical industry where the atmosphere as such is corrosive.

Atlas Copco's stainless steel motors have a "clean" design. Their smooth surfaces are cylindrical with no pockets where dirt can collect. The motors are easy to clean.

The motors have double seals in Viton at the output shaft to prevent dirt and liquids from entering the motor gears. The seals also prevent the gear lubricant from leaking out. All external parts, including the output shaft, are made of stainless steel. The grease in the motor complies with NSF H1 and FDA 21CFR § 178.3570. For applications where there might be moisture in the compressed air the stainless steel LZB-motors can be equipped with a stainless steel motor cell as an option. With this option the motor becomes 100% stainless, both internal and external.

ATEX Certified

All our air motors are ATEX Certified for fixtured applications, in compliance with the European Union's ATEX directive 2014/34/EU. For equipment used in potentially explosive environments. The LZL motors with Helical gears are not ATEX Certified.

EX-Certified air motors are ideal in hazardous environments where sparks or high outer temperatures might otherwise ignite explosive gases, vapour or dust.

See Explosion prevention guideline and the ATEX key, how to read the ATEX code, at the end of the catalogue.

Lubrication free air motors

Atlas Copco's lubrication free air motors are equipped with low-friction vanes, sealed bearings and vented cylinder plates. Since they release no lubricants into the air, they offer a viable drive solution for sensitive processes and hygienic environments where oil contamination would be at best a problem and, at worst, a catastrophe. Both lubrication free vanes and lubricated vanes are available as kits for replacement or conversion.



Silicon free

All the air motors are 100% silicon free. For applications handling paint, this is an absolute must as the presence of silicone can cause big problems.

LZB Vane motors

Introduction

LZB vane motors are designed to provide high performance and high standards of reliability. They are characterized by high power output and small physical size, Figure 12.

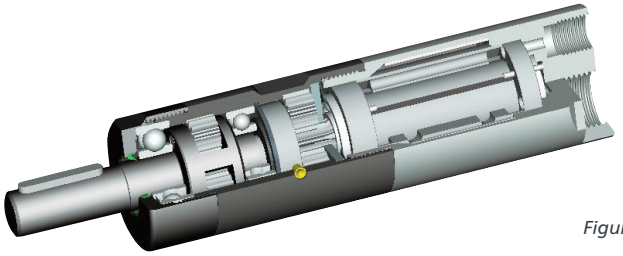

Figure 12

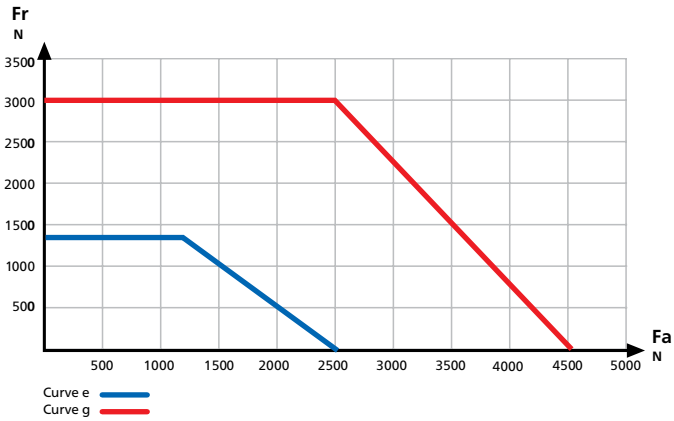

The design of the motor is long and slim. This gives a number of advantages, such as high power-to-volume ratio, low air consumption and long vane life. All motors utilize five vanes, which are supplied with vane air, to ensure excellent starting and low speed performance. Multi-step planetary gears are used to meet the torque and speed requirements of the application, offering high efficiency with compact dimensions.

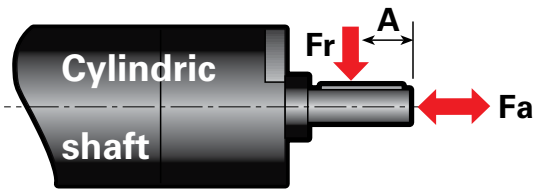

Figure 14

Shaft loading

The maximum allowable loads on a given motor´s output shaft are illustrated in Figures 13, 14. The relevant load curve code for a motor is stated in the data tables for each specific motor designation, under the "Shaft load code" column. These values have been calculated for shaft and bearing working lives of 10 million turns. To achieve a working life of 100 million turns, the loading factor must be halved.

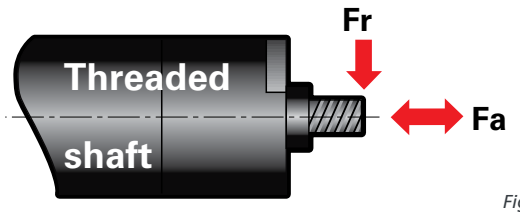

Figure 13

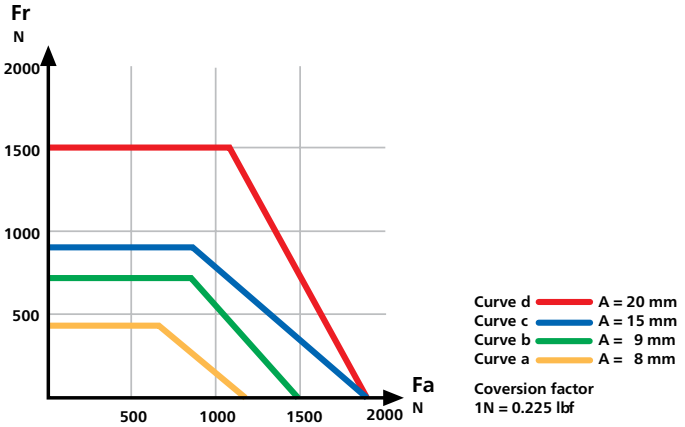

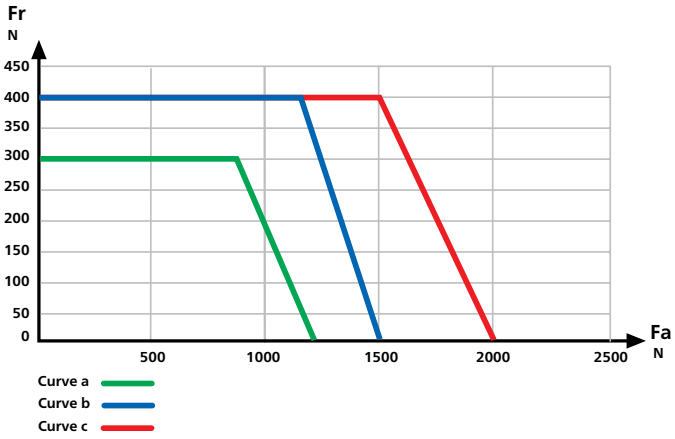

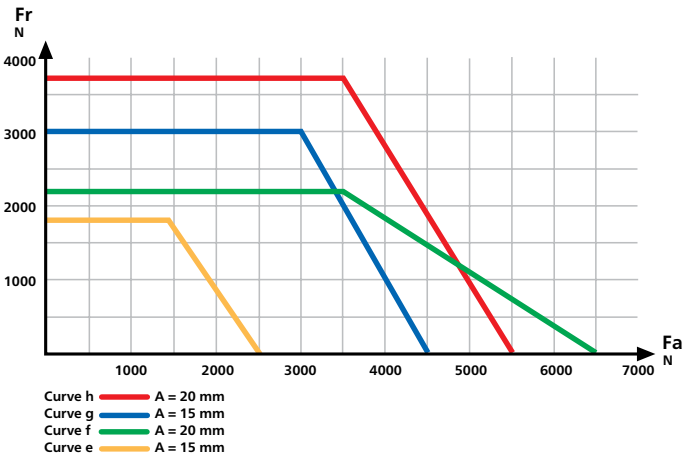

Mounting

Type LZB vane motors may be mounted in any position. To facilitate this, flange and foot mounting are available for eachmotor, Figure 15.



Foot



Flange



Figure 15

Connection

Non-reversible motor

When the compressed air supply is connected to the inlet, the direction of rotation will be as shown in Figure 16. If the exhaust air is to be piped away, a hose should be connected to the exhaust outlet. (EXH).

Reversible motor

The compressed air supply should be connected to the inlet that gives the desired direction of rotation, Figure 17. The inlet not in use functions as an additional outlet: it must not be plugged.

Clockwise rotation

Anti-clockwise rotation

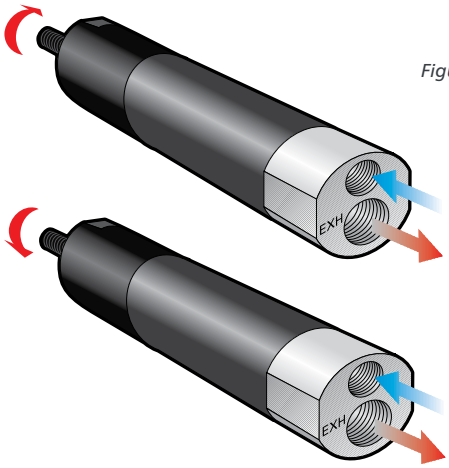

Figure 16

Anti-clockwise rotation

Clockwise rotation

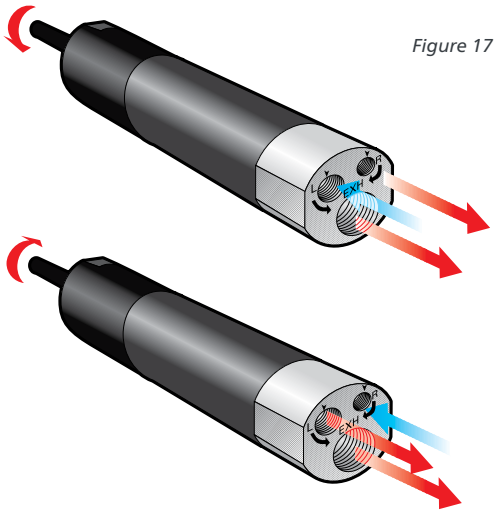

Figure 17

Hose dimensions

Information on hose dimensions recommended for use with type LZB air motors is detailed in table below. These dimensions are valid for hose lengths up to 3m. If lengths above that are used, choose a one size larger hose.

Hose size up to 3m length

Motor size	Rotation	Inlet connection thread BSP	Inlet connection thread NPTF	Inlet hose* mm	Inlet recomended nipple connection Ordering No.	Inlet nipple* diameter mm	Outlet connection thread BSP	Outlet hose* mm	Outlet recomended nipple connection Ordering No.	Outlet nipple* diameter mm
LZB14	A, AV, AR	1/8	-	8	9000 0240 00	5.0	1/8	8	9000 0240 00	5.0
LZB22	A, AV	1/8	-	8	9000 0240 00	5.0	1/4	10	9000 0247 00	8.0
LZB22	AR, LR	1/8	-	8	9000 0240 00	5.0	1/8	8	9000 0240 00	5.0
LZB33, LZB34	A, AV, AR, LR	1/4	-	10	9000 0247 00	8.0	1/4	10	9000 0247 00	8.0
LZB42	A, AR	1/4	-	10	9000 0247 00	8.0	1/2	16	9000 0244 00	13.4
LZB46	A, AV, AR	1/4	-	10	9000 0247 00	8.0	1/2	16	9000 0244 00	13.4
LZB54	A, AV, AR	3/8	-	13	9000 0248 00	9.3	1/2	16	9000 0244 00	13.4
LZB66	A, AR	3/8	-	13	9000 0248 00	9.3	3/4	20	9000 0245 00	17
LZB77	A, AR	-	1/2"-14	16	9000 0244 01	13.4	-	-	-	-
LZB77	A, AR	1/2**	-	16	9000 0244 00	13.4	-	-	-	-

** Recommended minimum inner diameter (for reversible motors, the same size should be used on both in-/outlet)*
*** Alternative connection thread BSP 1/2" delivered with the product*

LZL Vane motors

Introduction



LZL vane motors are available in five sizes, offering outputs of 1.05 kW, 1.3 kW, 2.3 kW, 3.4 kW and 5.2 kW, respectively.

They are designed to give outstanding starting and low speed performance. This is achieved by using a six vane motor and by optimum vane/cylinder sealing – obtained through a combination of 'vane air' and interconnecting pins.

Featuring few components, these motors are ruggedly constructed and offer a long service life.

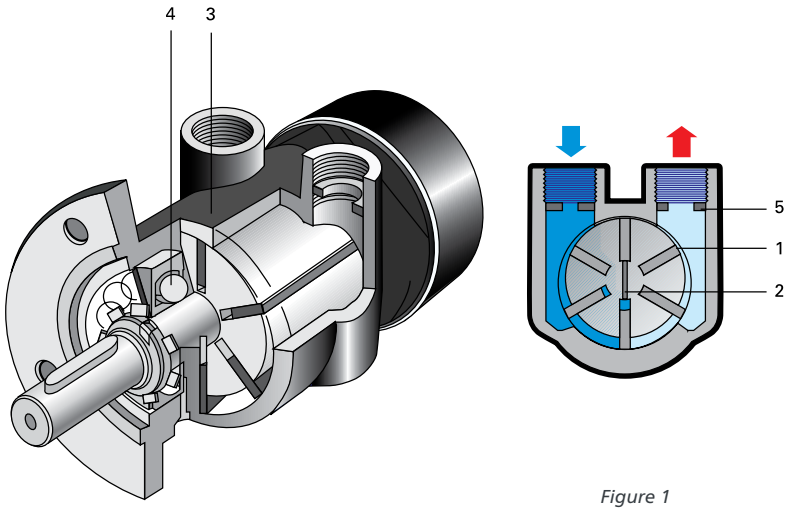

Figure 1

1. Six vanes for high starting torque.
2. Pins to force vanes out and provide starting reliability.
3. Cast iron housing.
4. Long life bearings.
5. Restriction at inlet and outlet ports.

Shaft loading

The permitted radial and axial shaft extension loadings are illustrated in Figure 2. These values have been calculated for shaft and bearing working lives of at least 1.000 hours at a speed that gives maximum output.

Restrictors

LZL vane motors are supplied with internal restrictors in the connection ports, to limit the maximum speed.

Clockwise rotation – the smaller restrictor (1) is fitted in the inlet port and the larger restrictor (2) in the outlet port (see Figure 3). This is how the motor is delivered.

Anti-clockwise rotation – the position of these restrictors must be reversed. Reversing duty – restrictor (1) must be replaced by a second restrictor of type (2). The restrictor (1) must then be fitted into the inlet to the control valve.

For further information, see page 11 chapter "Installation Examples".

It is permissible to remove these restrictors to increase motor output. However, the motor should not be run faster than max allowed speed (see data table).

Mounting

LZL vane motors may be mounted in any position. To facilitate this, a flange is integrated into the motor casing and a foot mounting is available for some motor variants.

Connection and hose dimensions

Information on connection size and recommended nipple and hose dimensions for use with LZL vane motors is shown in Table 2. These dimensions are valid for hose lengths up to 3m. For lengths above 3m, choose a hose one size larger.

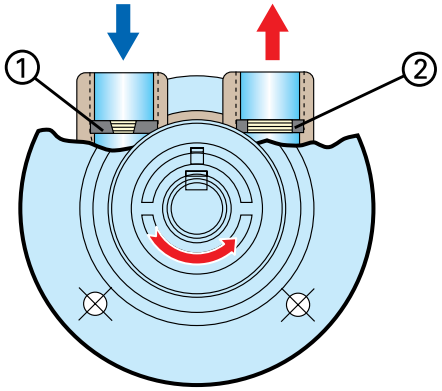

Figure 3

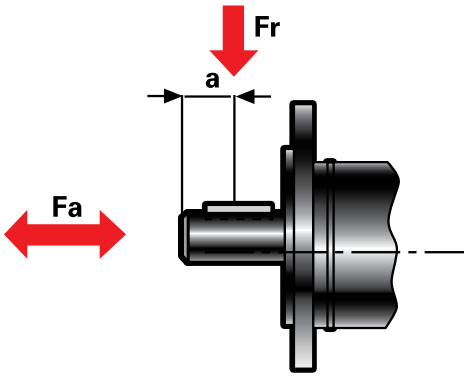

Hose size up to 3m length

Motor size	Used as	Inlet connec-tion thread BSP	Inlet hose* mm	Inlet nipple* dia mm	Outlet connection thread BSP	Outlet hose* mm	Outlet nipple* dia mm
LZL03	Non-reversible	3/8	13	10.3	3/8	16	13.4
	Reversible	3/8	16	13.4	3/8	16	13.4
LZL05	Non-reversible	1/2	13	10.3	1/2	20	17
	Reversible	1/2	20	17	1/2	20	17
LZL15	Non-reversible	3/4	16	13.4	3/4	25	21.8
	Reversible	3/4	25	21.8	3/4	25	21.8
LZL25	Non-reversible	1	20	17	1	32	28
	Reversible	1	32	28	1	32	28
LZL35	Non-reversible	1 1/4	20	17	1 1/4	32	28
	Reversible	1 1/4	32	28	1 1/4	32	28

** Recommended minimum inner diameter*

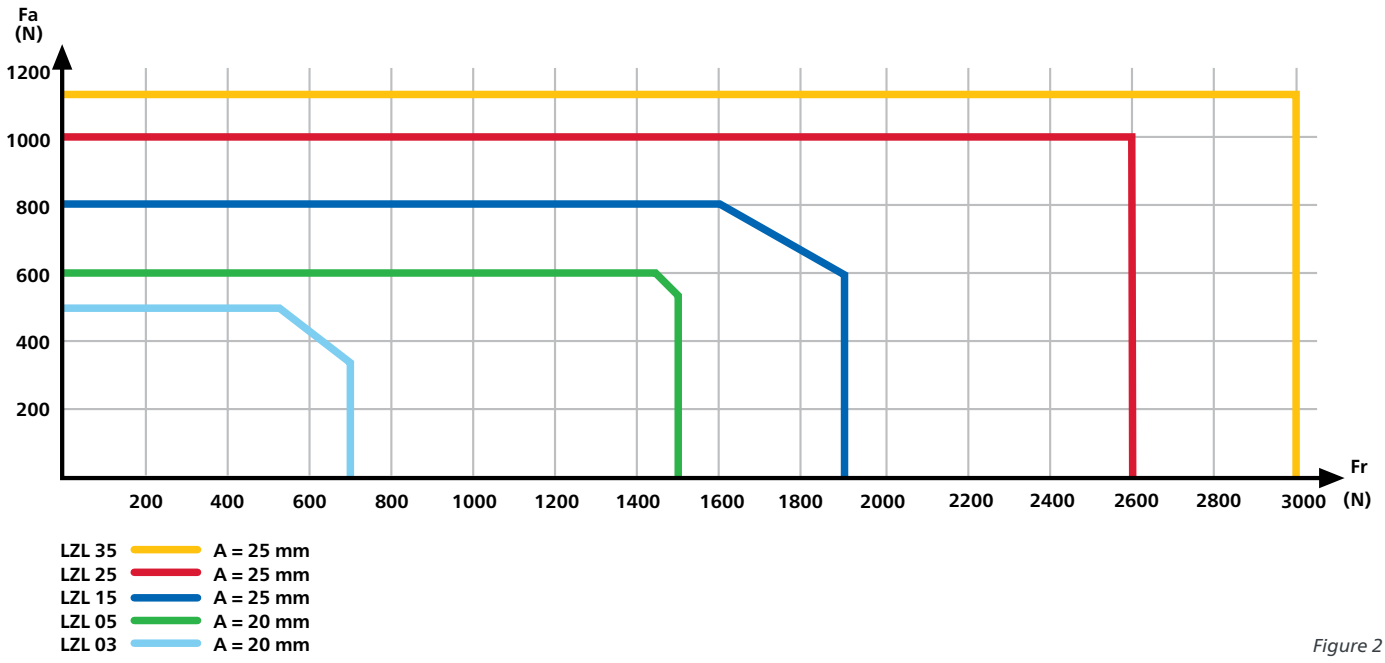

Figure 2

TZB Turbine motors

Introduction





TZB25 is built on turbine technology and is 40% more efficient than a traditional type of air motor using vane technology. Available in clockwise and counter clockwise direction. The 2.8 Kw – 3.8 hp TZB is geared for high torque applications and capable of maintaining stable speed under load. The TZB has a compact design with two mounting options for easy installation as standard. Designed and built for tough applications, the TZB outlasts and outperforms. A turbine motor that brings innovation and efficiency in tough applications.

- **High air efficiency**
- **Stable speed under load**
- **Lube free**
- **Long service life**



PZB Piston motors

Introduction

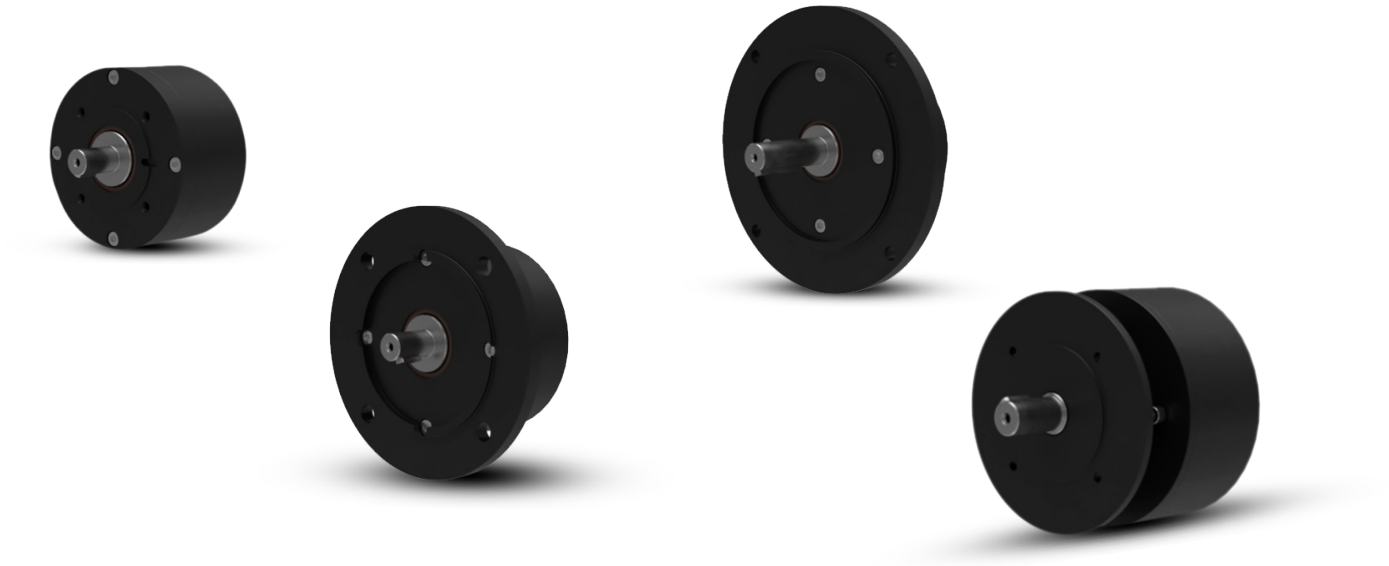

PZB Piston motor are available in tree sizes, offering outputs from 0.04 (0.05 hp) to 0.2 (0.27hp).

The PZB range of piston air motors is energy efficient and has unique low speed and high starting torque features, adding value in many applications. The compact design and flange configurations make it easy to install. The PZB air motor is ATEX Certified and operates without lubrication, making it ideal for white room and chemical, as well as automation and handling applications.

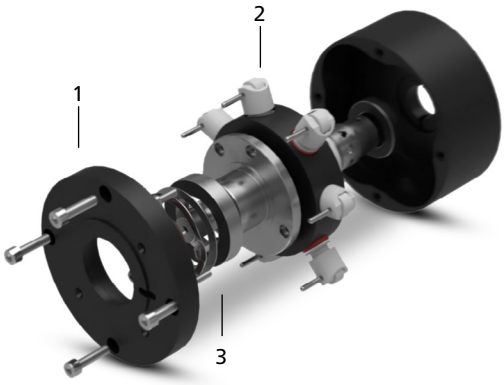

1.Flange configuration
2. Centrifugal piston technology.
3. Long life bearings

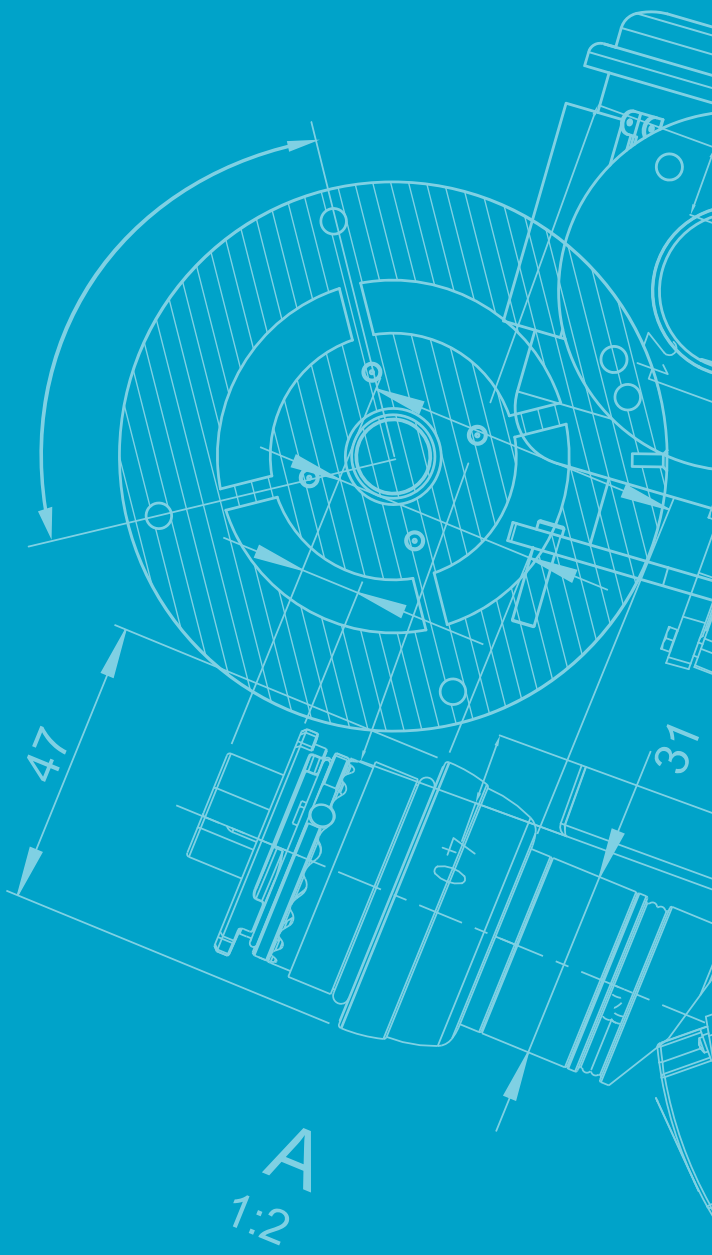
47
31
A
1:2

1 LZB
VANE MOTORS



Vane motors **LZB14-L**

Lubrication free

0.11 – 0.16 kW
0.15 – 0.21 hp



EX certification valid for fixture mounted use only with a maximum surrounding temperature of +40°C (104°F).

For optional vanes and accessories see chapter Accessories.

Data at air pressure 6.3 bar (91 psi)

Model Lubrication free	Max output kW	 hp	Speed at max output r/min	Torque at max output Nm	 lb-ft	Min starting torque Nm	 lb-ft	Stall torque Nm	 lb-ft	Free speed r/min	Air consump-tion at max output l/s	 cfm	Weight kg	 lb	Shaft loading code [1]	ATEX code	Ordering No.
Clockwise rotation (Keyed shaft)																	
LZB14-L-A190-11	0.16	0.21	9100	0.17	0.13	0.29	0.21	0.34	0.25	19500	4.0	8.5	0.30	0.66	a	Ex II 2GD h T4 IIC T110°C	8411 0113 00
LZB14-L-A048-11	0.16	0.21	2200	0.7	0.52	1.23	0.91	1.4	1.03	4800	4.0	8.5	0.30	0.66	a	Ex II 2GD h T6 IIC T85°C	8411 0113 18
LZB14-L-A029-11	0.16	0.21	1330	1.15	0.85	2	1.48	2.3	1.7	2900	4.0	8.5	0.30	0.66	a	Ex II 2GD h T6 IIC T85°C	8411 0113 26
LZB14-L-A012-11	0.16	0.21	530	2.9	2.1	5.1	3.8	5.8	4.28	1140	4.0	8.5	0.33	0.73	a	Ex II 2GD h T6 IIC T85°C	8411 0113 34
LZB14-L-A007-11	0.16	0.21	320	4.8	3.5	8.5	6.27	9.6	7.1	700	4.0	8.5	0.33	0.73	a	Ex II 2GD h T6 IIC T85°C	8411 0113 42
Clockwise rotation (Threaded shaft)																	
LZB14-L-A190-12	0.16	0.21	9100	0.17	0.13	0.29	0.21	0.34	0.25	19500	4.0	8.5	0.30	0.66	a	Ex II 2GD h T4 IIC T110°C	8411 0114 09
LZB14-L-A048-12	0.16	0.21	2200	0.7	0.52	1.23	0.91	1.4	1.03	4800	4.0	8.5	0.30	0.66	a	Ex II 2GD h T6 IIC T85°C	8411 0114 17
LZB14-L-A029-12	0.16	0.21	1330	1.15	0.85	2.0	1.48	2.3	1.7	2900	4.0	8.5	0.30	0.66	a	Ex II 2GD h T6 IIC T85°C	8411 0114 25
LZB14-L-A012-12	0.16	0.21	530	2.9	2.1	5.1	3.8	5.8	4.28	1140	4.0	8.5	0.33	0.73	a	Ex II 2GD h T6 IIC T85°C	8411 0114 33
LZB14-L-A007-12	0.16	0.21	320	4.8	3.5	8.5	6.27	9.6	7.1	700	4.0	8.5	0.33	0.73	a	Ex II 2GD h T6 IIC T85°C	8411 0114 41
Anti-clockwise rotation (Keyed shaft)																	
LZB14-L-AV190-11	0.16	0.21	9100	0.17	0.13	0.23	0.17	0.34	0.25	19500	4.0	8.5	0.30	0.66	a	Ex II 2GD h T4 IIC T110°C	8411 0117 06
LZB14-L-AV048-11	0.16	0.21	2200	0.7	0.52	0.99	0.73	1.4	1.03	4800	4.0	8.5	0.30	0.66	a	Ex II 2GD h T6 IIC T85°C	8411 0117 14
LZB14-L-AV029-11	0.16	0.21	1330	1.15	0.85	1.63	1.2	2.3	1.7	2900	4.0	8.5	0.30	0.66	a	Ex II 2GD h T6 IIC T85°C	8411 0117 22
LZB14-L-AV012-11	0.16	0.21	530	2.9	2.1	4.1	3.0	5.8	4.3	1140	4.0	8.5	0.33	0.73	a	Ex II 2GD h T6 IIC T85°C	8411 0117 30
LZB14-L-AV007-11	0.16	0.21	320	4.8	3.5	6.8	5.0	9.6	7.1	700	4.0	8.5	0.33	0.73	a	Ex II 2GD h T6 IIC T85°C	8411 0117 48
Reversible (Keyed shaft)																	
LZB14-L-AR140-11	0.11	0.15	7000	0.15	0.11	0.24	0.18	0.3	0.22	13000	3.6	7.6	0.30	0.66	a	Ex II 2GD h T4 IIC T110°C	8411 0115 08
LZB14-L-AR034-11	0.11	0.15	1690	0.62	0.46	1.01	0.74	1.24	0.91	3400	3.6	7.6	0.30	0.66	a	Ex II 2GD h T6 IIC T85°C	8411 0115 16
LZB14-L-AR020-11	0.11	0.15	1020	1.03	0.76	1.67	1.23	2.1	1.5	2000	3.6	7.6	0.30	0.66	a	Ex II 2GD h T6 IIC T85°C	8411 0115 24
LZB14-L-AR008-11	0.11	0.15	410	2.6	1.92	4.2	3.1	5.2	3.8	800	3.6	7.6	0.33	0.73	a	Ex II 2GD h T6 IIC T85°C	8411 0115 32
LZB14-L-AR005-11	0.11	0.15	250	4.3	3.2	6.9	5.1	8.6	6.3	490	3.6	7.6	0.33	0.73	a	Ex II 2GD h T6 IIC T85°C	8411 0115 40

[1] *For Shaft loading curves, see page 14.*

NOTE: - If running motors with 100% dry air and no lubrication, performance can be reduced with 5-15% at max output.
- To optimize life time for a lubrication free motor, use lubricated air if the application allows it.

Dimensions (mm)

Conversion factor 1 mm = 0.04 inch

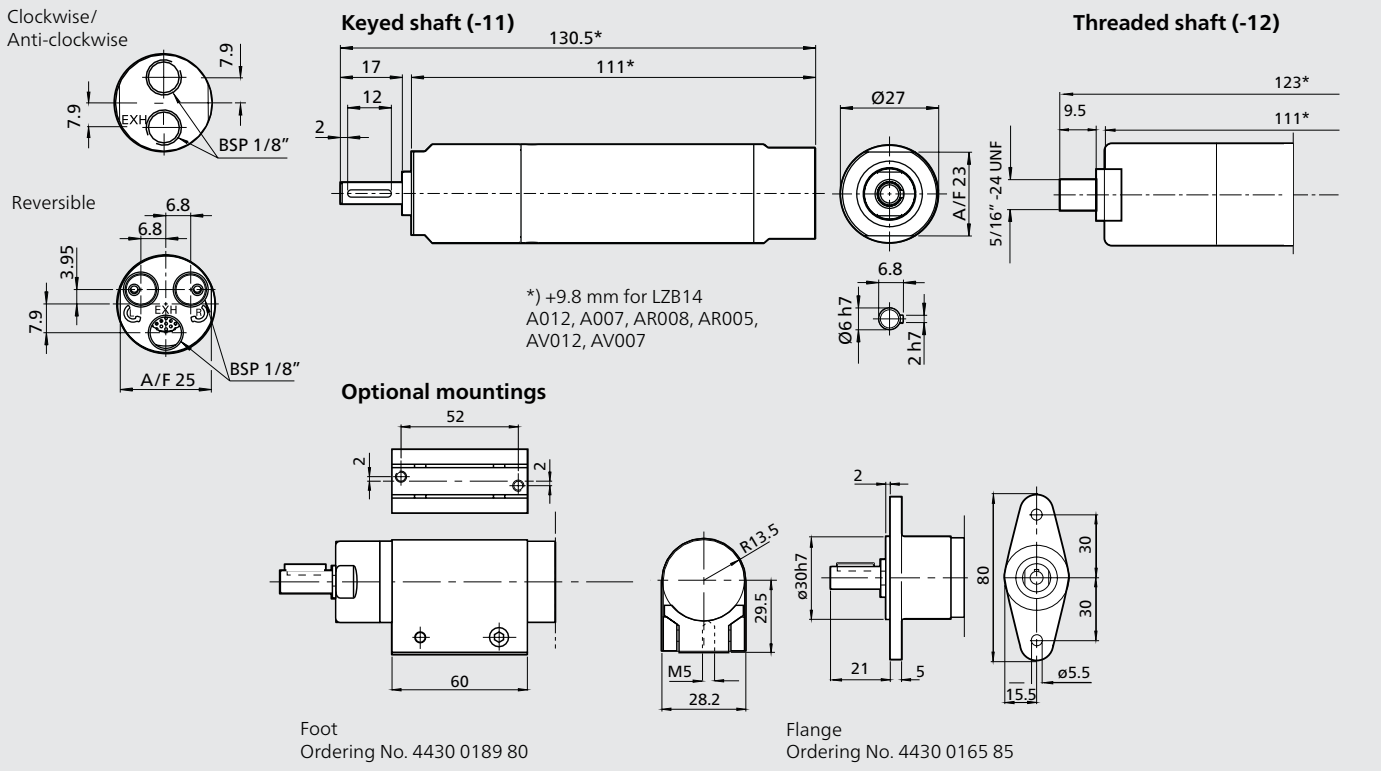

Vane motors **LZB14-RL**

Stainless steel and lubrication free

0.11 – 0.16 kW
0.15 – 0.21 hp



Material in parts:

- Back head and front part stainless steel:
  ISO 683/XIII Type 17, SS 14 2346, DIN 17440 X12CrNiS188
- Outgoing shaft and casing/gear rim stainless steel:
  ISO 683/XIII Type 9b, SS 14 2321, DIN 17440 X22CrNi17
- 100% Silicon free
- Grease that conforms to Food Grade regulations

EX certification valid for fixture mounted use only with a maximum surrounding temperature of +40°C (104°F).

For optional stainless steel motor cell, vane kits and other accessories see chapter Accessories.

Data at air pressure 6.3 bar (91 psi)

Model Lubrication free	Max output kW	 hp	Speed at max output r/min	Torque at max output Nm	 lb-ft	Min starting torque Nm	 lb-ft	Stall torque Nm	 lb-ft	Free speed r/min	Air consumption at max output l/s	 cfm	Weight kg	 lb	Shaft loading code [1]	ATEX code	Ordering No.
Clockwise rotation (Keyed shaft)																	
LZB14-RL-A190-11	0.16	0.21	9100	0.17	0.13	0.29	0.21	0.34	0.25	19500	4.0	8.5	0.37	0.82	a	Ex II 2GD h T4 IIC T110°C	8411 0122 09
LZB14-RL-A048-11	0.16	0.21	2200	0.70	0.52	1.23	0.91	1.4	1.03	4800	4.0	8.5	0.37	0.82	a	Ex II 2GD h T6 IIC T85°C	8411 0122 17
LZB14-RL-A029-11	0.16	0.21	1330	1.15	0.85	2.0	1.48	2.3	1.7	2900	4.0	8.5	0.37	0.82	a	Ex II 2GD h T6 IIC T85°C	8411 0122 25
LZB14-RL-A012-11	0.16	0.21	530	2.9	2.1	5.1	3.8	5.8	4.3	1140	4.0	8.5	0.40	0.88	a	Ex II 2GD h T6 IIC T85°C	8411 0122 33
LZB14-RL-A007-11	0.16	0.21	320	4.8	3.5	8.5	6.3	9.6	7.1	700	4.0	8.5	0.40	0.88	a	Ex II 2GD h T6 IIC T85°C	8411 0122 41
Reversible (Keyed shaft)																	
LZB14-RL-AR140-11	0.11	0.15	7000	0.15	0.11	0.24	0.18	0.3	0.22	13000	3.6	7.6	0.37	0.82	a	Ex II 2GD h T4 IIC T110°C	8411 0122 58
LZB14-RL-AR034-11	0.11	0.15	1690	0.62	0.46	1.01	0.74	1.24	0.91	3400	3.6	7.6	0.37	0.82	a	Ex II 2GD h T6 IIC T85°C	8411 0122 66
LZB14-RL-AR020-11	0.11	0.15	1020	1.03	0.76	1.67	1.23	2.1	1.5	2000	3.6	7.6	0.37	0.82	a	Ex II 2GD h T6 IIC T85°C	8411 0122 74
LZB14-RL-AR008-11	0.11	0.15	410	2.6	1.92	4.2	3.1	5.2	3.8	800	3.6	7.6	0.40	0.88	a	Ex II 2GD h T6 IIC T85°C	8411 0122 82
LZB14-RL-AR005-11	0.11	0.15	250	4.3	3.2	6.9	5.1	8.6	6.3	490	3.6	7.6	0.40	0.88	a	Ex II 2GD h T6 IIC T85°C	8411 0122 90

[1] *For Shaft loading curves, see page 14.*

NOTE: - If running motors with 100% dry air and no lubrication, performance can be reduced with 5-15% at max output.
- To optimize life time for a lubrication free motor, use lubricated air if the application allows it.

Dimensions (mm)

Conversion factor 1 mm = 0.04 inch

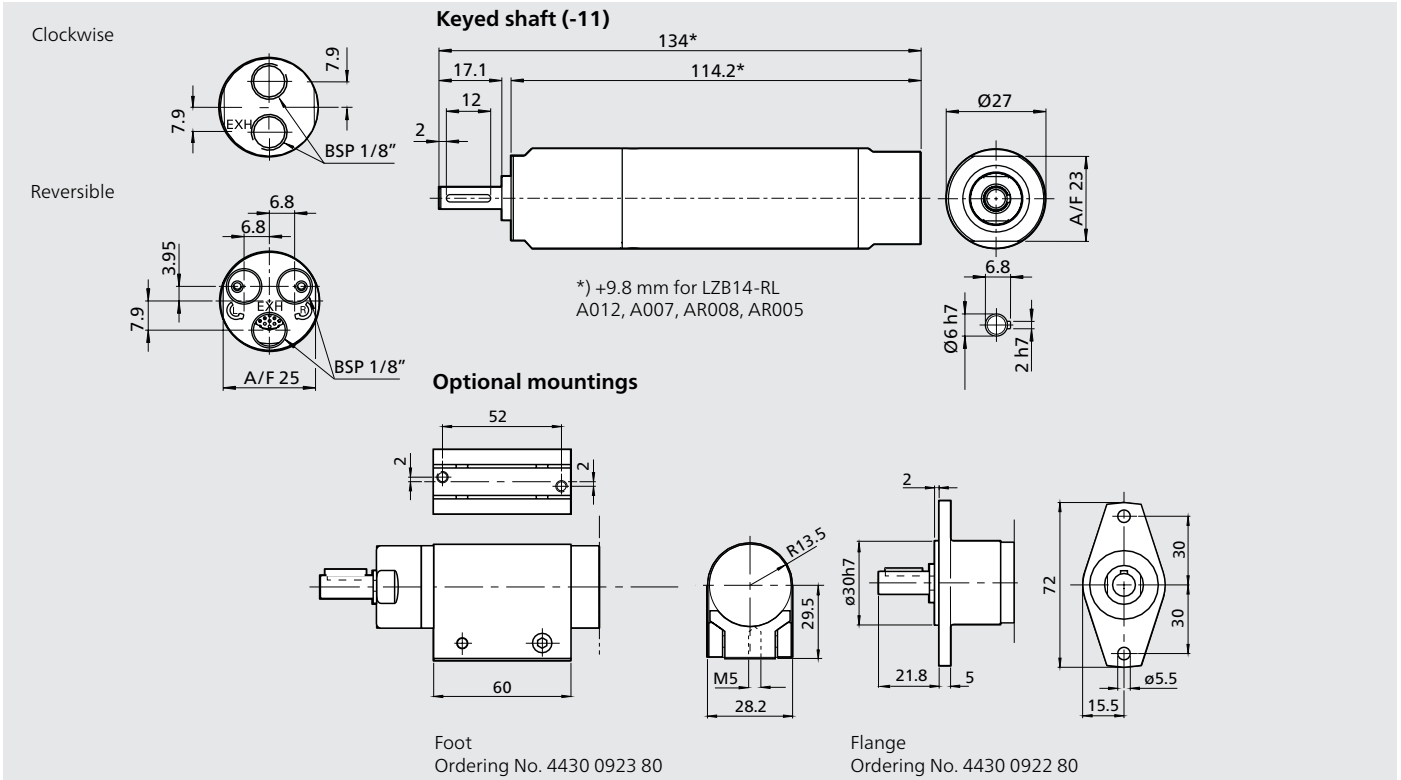

LZB14-L, LZB14-RL: Performance curves at air pressure 6.3 bar (91 psi)

Non-reversible (A and AV)

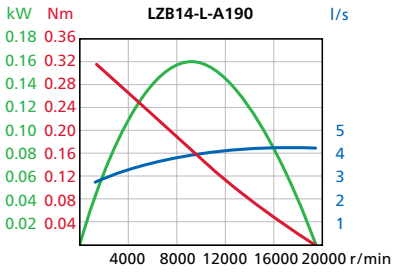

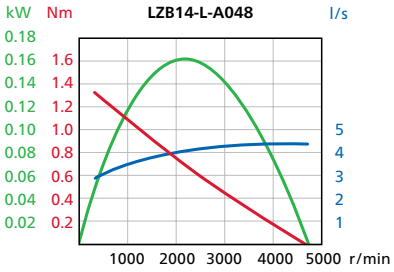

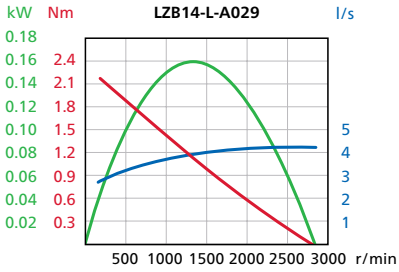

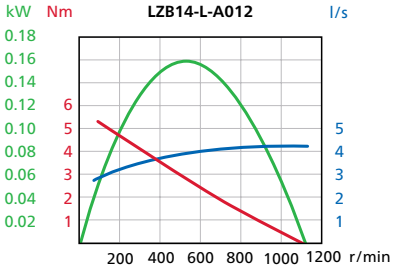

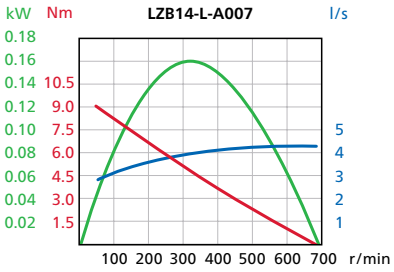

Reversible (AR)

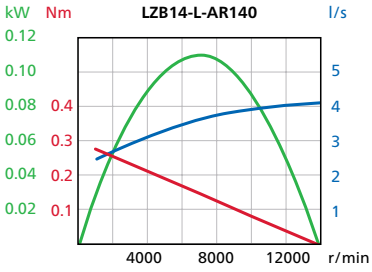

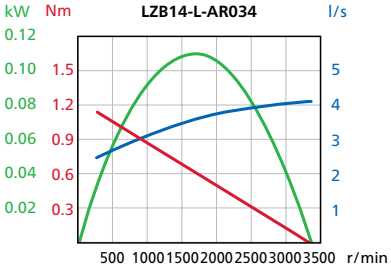

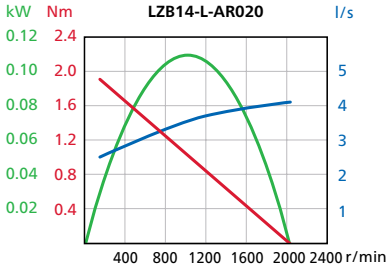

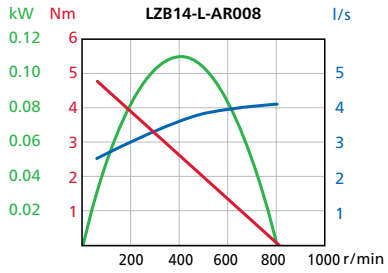

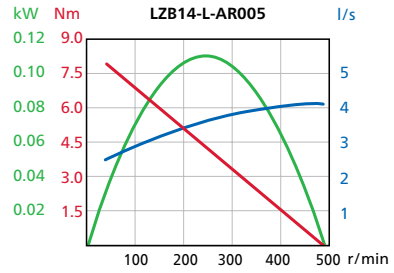

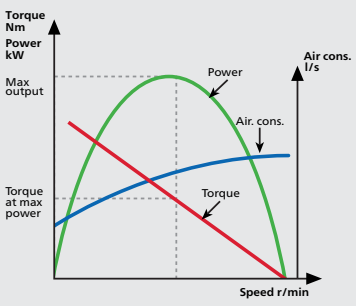

Conversion factors

1 kW	= 1.34 hp
1 Nm	= 0.74 lbf - ft
1 l/s	= 2.1 cfm
1 hp	= 0.75 kW
1 lbf-ft	= 1.36 Nm
1 cfm	= 0.47 l/s

For information about performance curves, see page 6.

Vane motors **LZB22-L**

Lubrication free

0.16 – 0.27 kW
0.21 – 0.36 hp



EX certification valid for fixture mounted use only with a maximum surrounding temperature of +40°C (104°F).

For optional vanes and accessories see chapter Accessories.

Data at air pressure 6.3 bar (91 psi)

Model Lubrication free	Max output kW	 hp	Speed at max output r/min	Torque at max output Nm	 lb-ft	Min starting torque Nm	 lb-ft	Stall torque Nm	 lb-ft	Free speed r/min	Air consumption at max output l/s	 cfm	Weight kg	 lb	Shaft loading code [1]	ATEX code	Ordering No.
Clockwise rotation (Keyed shaft)																	
LZB22-L-A220-11	0.27	0.36	9600	0.27	0.20	0.51	0.38	0.54	0.4	21500	5.3	11.2	0.55	1.21	b	Ex II 2GD h T4 IIC T110°C	8411 0214 08
LZB22-L-A049-11	0.27	0.36	2100	1.2	0.89	2.3	1.7	2.4	1.8	4700	5.3	11.2	0.55	1.21	b	Ex II 2GD h T6 IIC T85°C	8411 0214 16
LZB22-L-A036-11	0.27	0.36	1590	1.6	1.2	3.1	2.3	3.2	2.4	3550	5.3	11.2	0.55	1.21	b	Ex II 2GD h T6 IIC T85°C	8411 0214 24
LZB22-L-A022-11	0.27	0.36	960	2.7	2.0	5.1	3.8	5.4	4.0	2100	5.3	11.2	0.55	1.21	b	Ex II 2GD h T6 IIC T85°C	8411 0214 32
LZB22-L-A011-11	0.26	0.35	480	5.3	3.9	10	7.4	10.6	7.8	1040	5.3	11.2	0.75	1.65	b	Ex II 2GD h T6 IIC T85°C	8411 0214 40
LZB22-L-A008-11	0.26	0.35	360	7.1	5.2	13.5	10	14.2	10.5	770	5.3	11.2	0.75	1.65	b	Ex II 2GD h T6 IIC T85°C	8411 0214 57
LZB22-L-A005-11	0.26	0.35	210	11.8	8.7	22	16.2	23.6	17.4	480	5.3	11.2	0.75	1.65	b	Ex II 2GD h T6 IIC T85°C	8411 0214 65
Clockwise rotation (Threaded shaft)																	
LZB22-L-A220-12	0.27	0.36	9600	0.27	0.20	0.51	0.38	0.54	0.4	21500	5.3	11.2	0.55	1.21	b	Ex II 2GD h T4 IIC T110°C	8411 0214 73
LZB22-L-A049-12	0.27	0.36	2100	1.2	0.89	2.3	1.7	2.4	1.8	4700	5.3	11.2	0.55	1.21	b	Ex II 2GD h T6 IIC T85°C	8411 0214 81
LZB22-L-A036-12	0.27	0.36	1590	1.6	1.2	3.1	2.3	3.2	2.4	3550	5.3	11.2	0.55	1.21	b	Ex II 2GD h T6 IIC T85°C	8411 0214 99
LZB22-L-A022-12	0.27	0.36	960	2.7	2.0	5.1	3.8	5.4	4.0	2100	5.3	11.2	0.55	1.21	b	Ex II 2GD h T6 IIC T85°C	8411 0215 07
LZB22-L-A011-12	0.26	0.35	480	5.3	3.9	10	7.4	10.6	7.8	1040	5.3	11.2	0.75	1.65	b	Ex II 2GD h T6 IIC T85°C	8411 0215 15
LZB22-L-A008-12	0.26	0.35	360	7.1	5.2	13.5	10	14.2	10.5	770	5.3	11.2	0.75	1.65	b	Ex II 2GD h T6 IIC T85°C	8411 0215 23
LZB22-L-A005-12	0.26	0.35	210	11.8	8.7	22	16.2	23.6	17.4	480	5.3	11.2	0.75	1.65	b	Ex II 2GD h T6 IIC T85°C	8411 0215 31
Anti-clockwise rotation (Keyed shaft)																	
LZB22-L-AV220-11	0.27	0.36	9600	0.27	0.20	0.32	0.24	0.54	0.4	21500	6.5	13.8	0.55	1.21	b	Ex II 2GD h T4 IIC T110°C	8411 0226 14
LZB22-L-AV049-11	0.27	0.36	2100	1.2	0.89	1.4	1.0	2.4	1.8	4700	6.5	13.8	0.55	1.21	b	Ex II 2GD h T6 IIC T85°C	8411 0209 62
LZB22-L-AV036-11	0.27	0.36	1590	1.6	1.2	1.9	1.4	3.2	2.4	3550	6.5	13.8	0.55	1.21	b	Ex II 2GD h T6 IIC T85°C	8411 0207 15
LZB22-L-AV022-11	0.27	0.36	960	2.7	2.0	3.2	2.3	5.4	4.0	2100	6.5	13.8	0.55	1.21	b	Ex II 2GD h T6 IIC T85°C	8411 0216 30
LZB22-L-AV011-11	0.26	0.35	480	5.3	3.9	6.0	4.4	10.6	7.8	1040	6.5	13.8	0.75	1.65	b	Ex II 2GD h T6 IIC T85°C	8411 0226 22
LZB22-L-AV008-11	0.26	0.35	360	7.1	5.2	8.5	6.2	14.2	10.5	770	6.5	13.8	0.75	1.65	b	Ex II 2GD h T6 IIC T85°C	8411 0226 30
LZB22-L-AV005-11	0.26	0.35	210	11.8	8.7	14	10.3	23.6	17.4	480	6.5	13.8	0.75	1.65	b	Ex II 2GD h T6 IIC T85°C	8411 0226 48
Reversible (Keyed shaft)																	
LZB22-L-AR126-11	0.16	0.21	7000	0.24	0.18	0.32	0.24	0.48	0.35	13100	5.0	10.6	0.55	1.21	b	Ex II 2GD h T4 IIC T110°C	8411 0215 49
LZB22-L-AR028-11	0.16	0.21	1570	1.1	0.81	1.4	1.0	2.2	1.6	2850	5.0	10.6	0.55	1.21	b	Ex II 2GD h T6 IIC T85°C	8411 0215 56
LZB22-L-AR021-11	0.16	0.21	1170	1.4	1.0	1.9	1.4	2.8	2.1	2100	5.0	10.6	0.55	1.21	b	Ex II 2GD h T6 IIC T85°C	8411 0215 64
LZB22-L-AR013-11	0.16	0.21	700	2.4	1.8	3.2	2.4	4.8	3.5	1300	5.0	10.6	0.55	1.21	b	Ex II 2GD h T6 IIC T85°C	8411 0215 72
LZB22-L-AR006-11	0.16	0.21	350	4.7	3.5	6.3	4.6	9.4	6.9	640	5.0	10.6	0.75	1.65	b	Ex II 2GD h T6 IIC T85°C	8411 0215 80
LZB22-L-AR005-11	0.16	0.21	260	6.3	4.6	8.5	6.3	12.6	9.3	480	5.0	10.6	0.75	1.65	b	Ex II 2GD h T6 IIC T85°C	8411 0215 98
LZB22-L-AR003-11	0.16	0.21	160	10.5	7.7	14	10.3	21	15.5	290	5.0	10.6	0.75	1.65	b	Ex II 2GD h T6 IIC T85°C	8411 0216 06

[1] *For Shaft loading curves, see page 14.*

NOTE: - *If running motors with 100% dry air and no lubrication, performance can be reduced with 5-15% at max output.*
- *To optimize life time for a lubrication free motor, use lubricated air if the application allows it.*

Clockwise

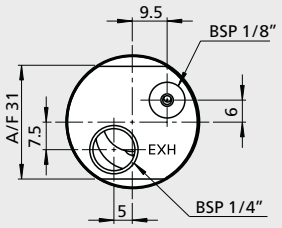

Anti-clockwise

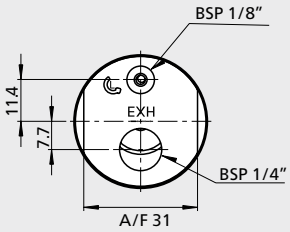

Reversible

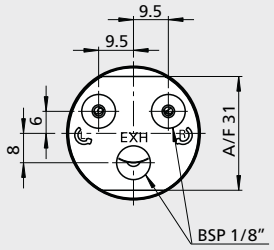

Keyed shaft (-11)

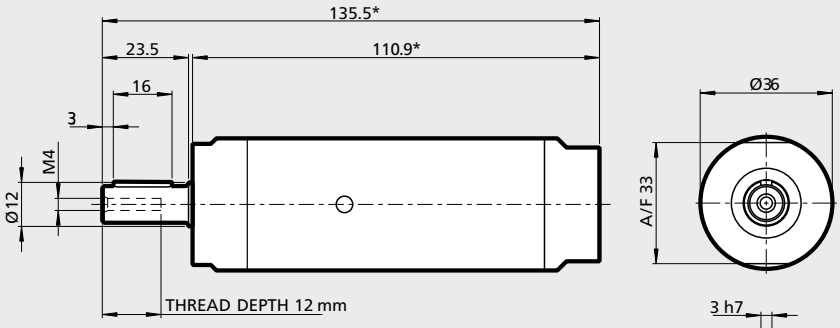

*) +31 mm for

LZB22-L - A011	LZB22-L - AV011 LZB22-L - AR006
LZB22-L - A008	LZB22-L - AV008 LZB22-L - AR005
LZB22-L - A005	LZB22-L - AV005 LZB22-L - AR003

Threaded shaft (-12)

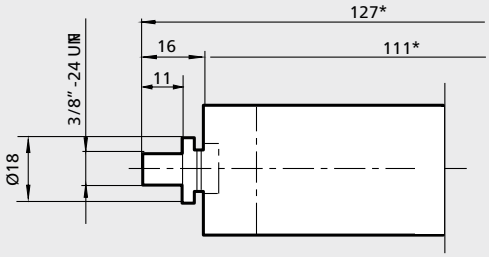

Optional mountings

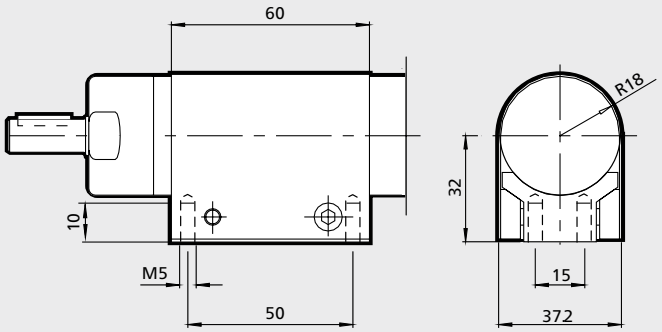

Foot
Ordering No. 4430 0160 80

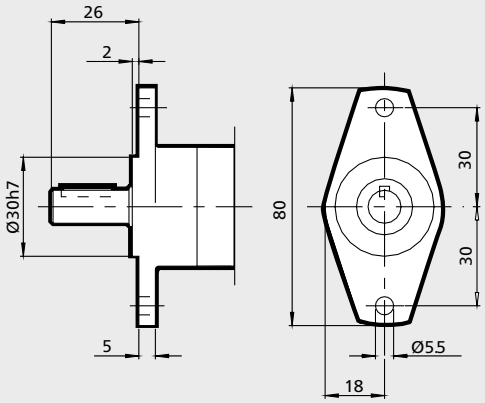

Flange
Ordering No.
4110 0984 85 with holes
4110 0984 80 without holes

Vane motors **LZB22-RL**

Stainless steel and lubrication free

0.16 – 0.27 kW
0.21 – 0.36 hp



Material in parts:

- Back head and front part stainless steel:
  ISO 683/XIII Type 17, SS 14 2346, DIN 17440 X12CrNiS188
- Outgoing shaft and casing/gear rim stainless steel:
  ISO 683/XIII Type 9b, SS 14 2321, DIN 17440 X22CrNi17'
- 100% Silicon free
- Grease that conforms to Food Grade regulations

EX certification valid for fixture mounted use only with a maximum surrounding temperature of +40°C (104°F).

For optional stainless steel motor cell, vane kits and other accessories see chapter Accessories.

Data at air pressure 6.3 bar (91 psi)

Model Lubrication free	Max output kW	 hp	Speed at max output r/min	Torque at max output Nm	 lb-ft	Min starting torque Nm	 lb-ft	Stall torque Nm	 lb-ft	Free speed r/min	Air consumption at max output l/s	 cfm	Weight kg	 lb	Shaft loading code [1]	ATEX code	Ordering No.
Clockwise rotation (Keyed shaft)																	
LZB22-RL-A220-11	0.27	0.36	9600	0.27	0.20	0.51	0.38	0.54	0.4	19500	5.3	11.2	0.63	1.39	b	Ex II 2GD h T4 IIC T110°C	8411 0219 11
LZB22-RL-A049-11	0.27	0.36	2100	1.2	0.89	2.3	1.7	2.4	1.8	4700	5.3	11.2	0.63	1.39	b	Ex II 2GD h T6 IIC T85°C	8411 0219 29
LZB22-RL-A036-11	0.27	0.36	1590	1.6	1.2	3.1	2.3	3.2	2.4	3550	5.3	11.2	0.63	1.39	b	Ex II 2GD h T6 IIC T85°C	8411 0219 37
LZB22-RL-A022-11	0.27	0.36	960	2.7	2.0	5.1	3.8	5.4	4.0	2100	5.3	11.2	0.63	1.39	b	Ex II 2GD h T6 IIC T85°C	8411 0219 45
LZB22-RL-A011-11	0.26	0.35	480	5.3	3.9	10	7.4	10.6	7.8	1040	5.3	11.2	0.83	1.83	b	Ex II 2GD h T6 IIC T85°C	8411 0219 52
LZB22-RL-A008-11	0.26	0.35	360	7.1	5.2	13.5	10	14.2	10.5	770	5.3	11.2	0.83	1.83	b	Ex II 2GD h T6 IIC T85°C	8411 0219 60
LZB22-RL-A005-11	0.26	0.35	210	11.8	8.7	22	16.2	23.6	17.4	480	5.3	11.2	0.83	1.83	b	Ex II 2GD h T6 IIC T85°C	8411 0219 78
Reversible (Keyed shaft)																	
LZB22-RL-AR126-11	0.16	0.21	7000	0.24	0.18	0.32	0.24	0.48	0.35	13100	5.0	10.6	0.63	1.39	b	Ex II 2GD h T4 IIC T110°C	8411 0220 83
LZB22-RL-AR028-11	0.16	0.21	1570	1.1	0.81	1.4	1.0	2.2	1.6	2850	5.0	10.6	0.63	1.39	b	Ex II 2GD h T6 IIC T85°C	8411 0220 75
LZB22-RL-AR021-11	0.16	0.21	1170	1.4	1.0	1.9	1.4	2.8	2.1	2100	5.0	10.6	0.63	1.39	b	Ex II 2GD h T6 IIC T85°C	8411 0222 16
LZB22-RL-AR013-11	0.16	0.21	700	2.4	1.8	3.2	2.4	4.8	3.5	1300	5.0	10.6	0.63	1.39	b	Ex II 2GD h T6 IIC T85°C	8411 0220 67
LZB22-RL-AR006-11	0.16	0.21	350	4.7	3.5	6.3	4.6	9.4	6.9	640	5.0	10.6	0.83	1.83	b	Ex II 2GD h T6 IIC T85°C	8411 0220 59
LZB22-RL-AR005-11	0.16	0.21	260	6.3	4.6	8.5	6.3	12.6	9.3	480	5.0	10.6	0.83	1.83	b	Ex II 2GD h T6 IIC T85°C	8411 0222 08
LZB22-RL-AR003-11	0.16	0.21	160	10.5	7.7	14	10.3	21	15.5	290	5.0	10.6	0.83	1.83	b	Ex II 2GD h T6 IIC T85°C	8411 0220 91

[1] *For Shaft loading curves, see page 14.*

NOTE: - If running motors with 100% dry air and no lubrication, performance can be reduced with 5-15% at max output.
- To optimize life time for a lubrication free motor, use lubricated air if the application allows it.

Dimensions (mm)

Conversion factor 1 mm = 0.04 inch

Keyed shaft (-11)

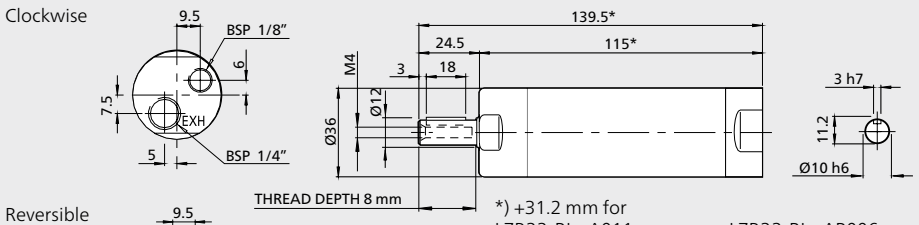

*) +31.2 mm for
LZB22-RL - A011
LZB22-RL - A008
LZB22-RL - A005

LZB22-RL - AR006
LZB22-RL - AR005
LZB22-RL - AR003

Optional mounting

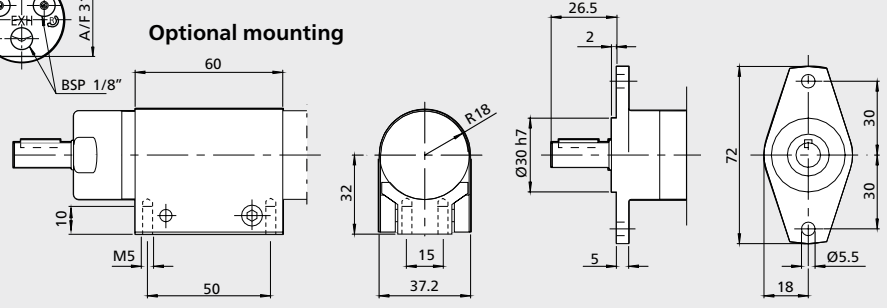

Foot
Ordering No. 4430 0862 80

Flange
Ordering No. 4430 0861 80

LZB22-L, LZB22-RL: Performance curves at air pressure 6.3 bar (91 psi)

Non-reversible (A and AV)

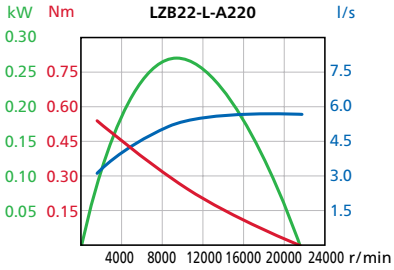

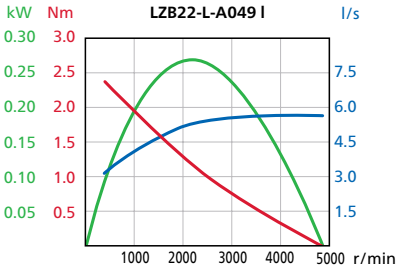

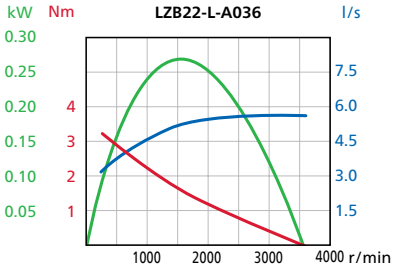

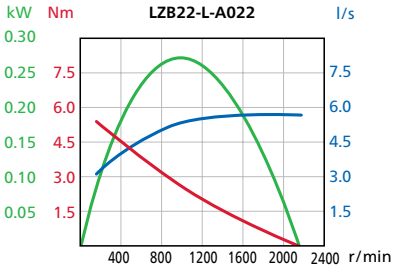

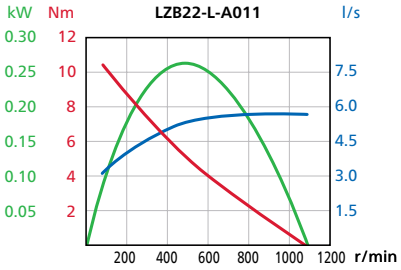

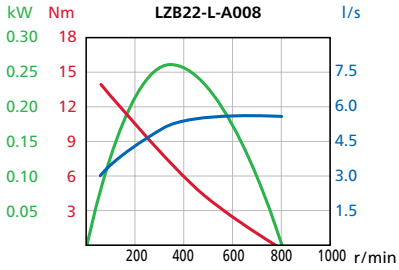

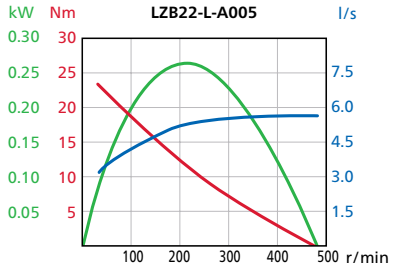

LZB22-L, LZB22-RL: Performance curves at air pressure 6.3 bar (91 psi)

Reversible (AR)

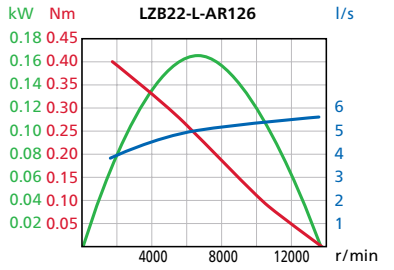

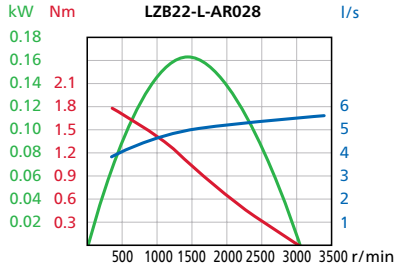

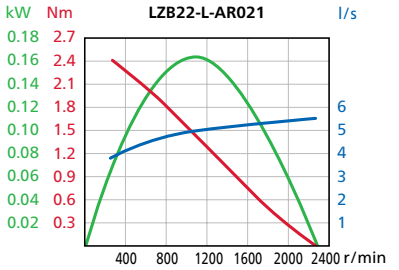

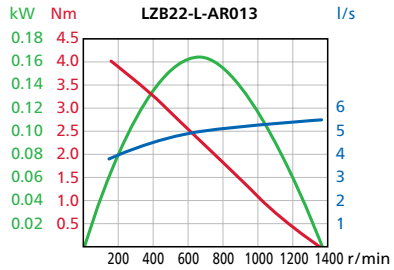

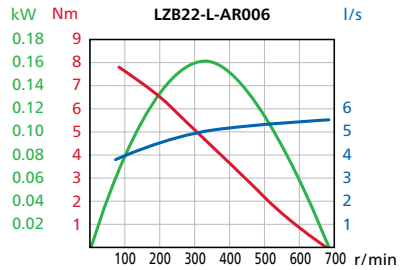

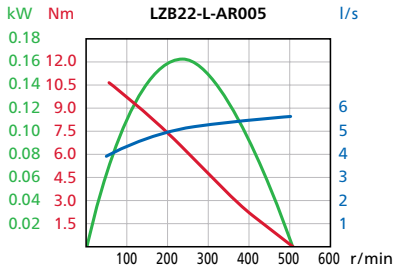

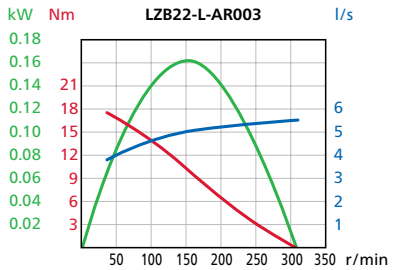

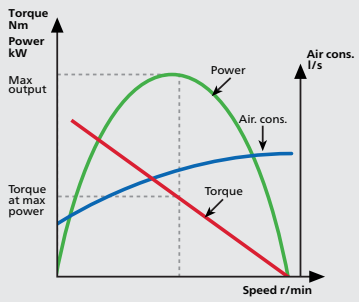

Conversion factors

1 kW	= 1.34 hp
1 Nm	= 0.74 lbf - ft
1 l/s	= 2.1 cfm
1 hp	= 0.75 kW
1 lbf-ft	= 1.36 Nm
1 cfm	= 0.47 l/s

For information about performance curves, see page 6.

Vane motors **LZB22-L-LR**

Low speed, low torque, lubrication free and reversible
LZB22-RL-LR
Stainless steel, low speed, low torque,
lubrication free and reversible



Maximum permitted torque 9 Nm (6.6 lb_f·ft)

Within their working range these motors have a very steep torque curve. Speed and air consumption are relatively constant regardless of the load.

Stainless steel Version:

- 100% Silicon free
- Grease that conforms to Food Grade regulations

EX certification valid for fixture mounted use only with a maximum surrounding temperature of +40°C (104°F).

For optional stainless steel motor cell, vane kits and other accessories see chapter Accessories.

Data at air pressure 6.3 bar (91 psi)

Model Lubrication free	Free speed r/min	Air consumption at free speed l/s	 cfm	Weight kg	 lb	Shaft loading code [1]	ATEX code	Ordering No.
LZB22-L-LR100-11	110	5.8	12.3	0.95	2.09	b	Ex II 2GD h T6 IIC T85°C	8411 0216 22
LZB22-L-LR5-11	5	5.8	12.3	1.35	3.0	b	Ex II 2GD h T6 IIC T85°C	8411 0216 14
Stainless steel, Lubrication free								
LZB22-RL-LR100-11	110	5.8	12.3	1.03	2.27	b	Ex II 2GD h T6 IIC T85°C	8411 0222 40
LZB22-RL-LR5-11	5	5.8	12.3	1.43	3.15	b	Ex II 2GD h T6 IIC T85°C	8411 0222 57

[1] *For Shaft loading curves, see page 14.*

NOTE: - If running motors with 100% dry air and no lubrication, performance can be reduced with 10-20% at free speed.
- To optimize life time for a lubrication free motor, use lubricated air if the application allows it.

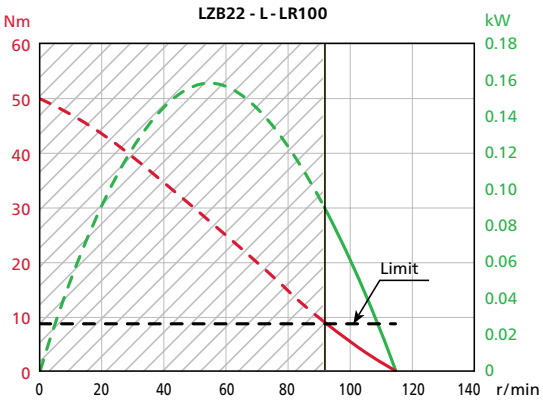

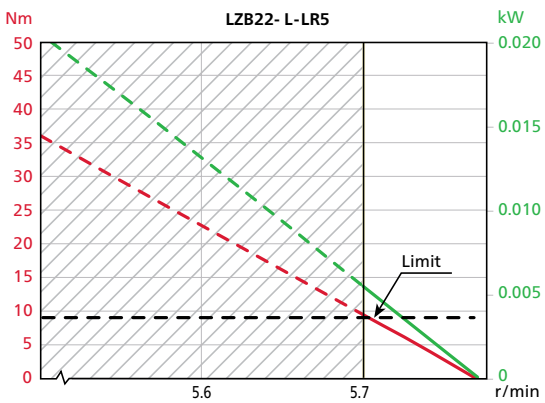

Dimensions (mm)

Conversion factor 1 mm = 0.04 inch

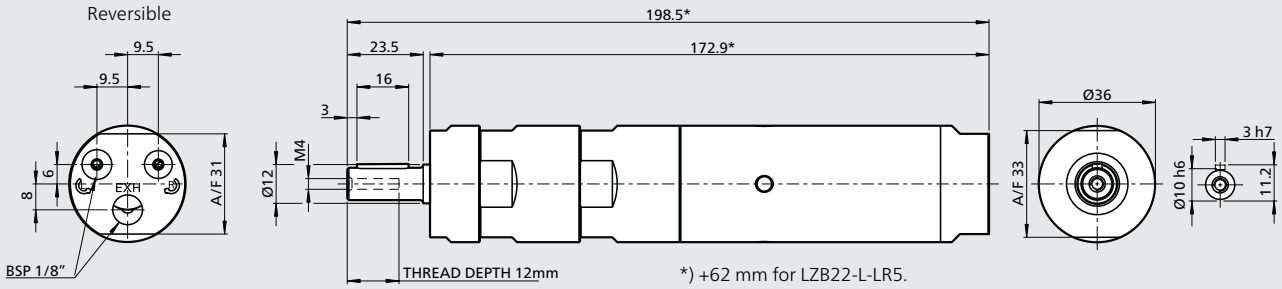

*) +62 mm for LZB22-L-LR5.

Optional mountings

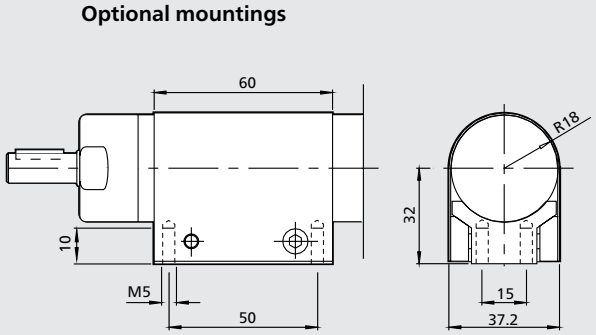

Foot
Ordering No. 4430 0160 80

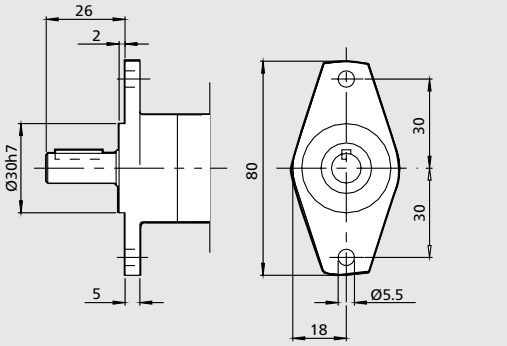

Flange
Ordering No. 4110 0984 85 with holes
4110 0984 80 without holes

Dimensions (mm)

Conversion factor 1 mm = 0.04 inch

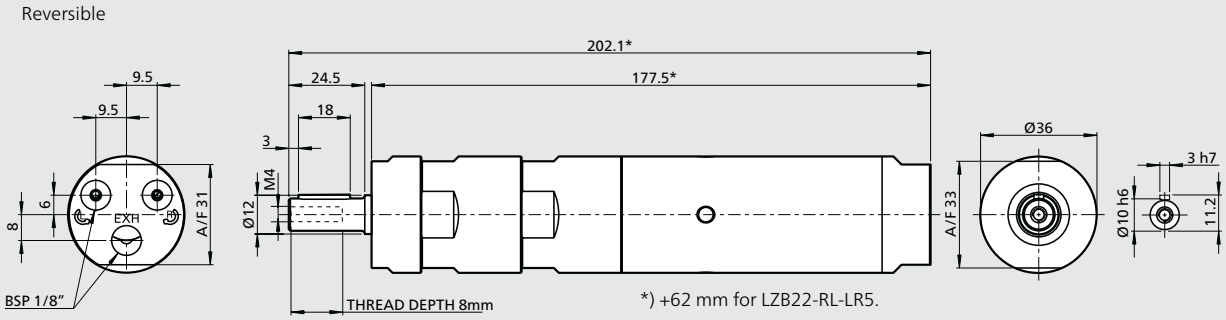

*) +62 mm for LZB22-RL-LR5.

Optional mountings

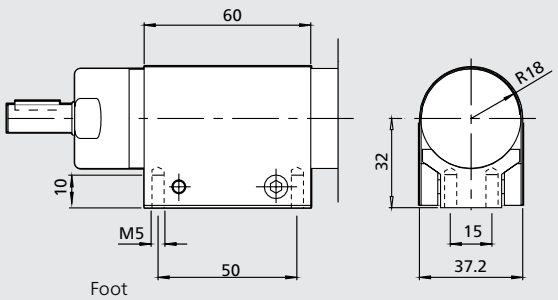

Foot
Ordering No. 4430 0862 80

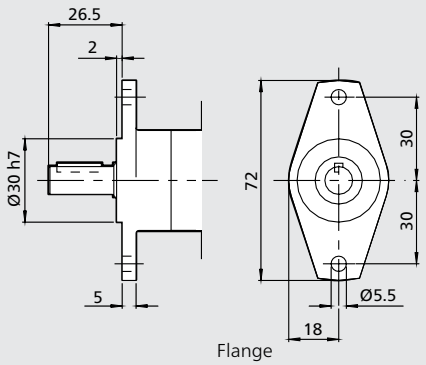

Flange
Ordering No. 4430 0861 80

Vane motors **LZB33-L**

Lubrication free

0.24 – 0.39 kW
0.32 – 0.52 hp



EX certification valid for fixture mounted use only with a maximum surrounding temperature of +40°C (104°F).

For optional vanes and accessories see chapter Accessories.

Data at air pressure 6.3 bar (91 psi)

Model Lubrication free	Max output kW	 hp	Speed at max output r/min	Torque at max output Nm	 lb-ft	Min starting torque Nm	 lb-ft	Stall torque Nm	 lb-ft	Free speed r/min	Air consumption at max output l/s	 cfm	Weight kg	 lb	Shaft loading code [1]	ATEX code	Ordering No.
Clockwise rotation (Keyed shaft)																	
LZB33-L-A210-11	0.39	0.52	9400	0.4	0.3	0.76	0.56	0.8	0.59	19000	8.1	17.2	0.75	1.65	c	Ex II 2GD h T4 IIC T110°C	8411 0306 07
LZB33-L-A060-11	0.39	0.52	2600	1.4	1.0	2.7	2.0	2.8	2.1	5350	8.1	17.2	0.75	1.65	c	Ex II 2GD h T6 IIC T85°C	8411 0306 15
LZB33-L-A033-11	0.39	0.52	1450	2.6	1.9	4.9	3.6	5.2	3.8	3000	8.1	17.2	0.75	1.65	c	Ex II 2GD h T6 IIC T85°C	8411 0306 23
LZB33-L-A026-11	0.39	0.52	1170	3.2	2.4	6.1	4.5	6.4	4.7	2400	8.1	17.2	0.75	1.65	c	Ex II 2GD h T6 IIC T85°C	8411 0306 31
LZB33-L-A013-11	0.38	0.51	580	6.4	4.7	12	8.9	12.8	9.4	1180	8.1	17.2	1.02	2.25	c	Ex II 2GD h T6 IIC T85°C	8411 0306 49
LZB33-L-A007-11	0.38	0.51	320	11.5	8.5	21	15.5	23	17	650	8.1	17.2	1.02	2.25	c	Ex II 2GD h T6 IIC T85°C	8411 0306 56
LZB33-L-A005-11	0.38	0.51	260	14.2	10.5	26	19.2	28	21	520	8.1	17.2	1.02	2.25	c	Ex II 2GD h T6 IIC T85°C	8411 0306 64
LZB33-L-A0030-11 [2]	0.37	0.50	160	22.3	16.4	40	30	45	33	340	8.1	17.2	1.5	3.31	d	Ex II 2GD h T6 IIC T85°C	8411 0306 72
Clockwise rotation (Threaded shaft)																	
LZB33-L-A210-12	0.39	0.52	9400	0.4	0.3	0.76	0.56	0.8	0.59	19000	8.1	17.2	0.75	1.65	c	Ex II 2GD h T4 IIC T110°C	8411 0306 80
LZB33-L-A060-12	0.39	0.52	2600	1.4	1.0	2.7	2.0	2.8	2.1	5350	8.1	17.2	0.75	1.65	c	Ex II 2GD h T6 IIC T85°C	8411 0306 98
LZB33-L-A033-12	0.39	0.52	1450	2.6	1.9	4.9	3.6	5.2	3.8	3000	8.1	17.2	0.75	1.65	c	Ex II 2GD h T6 IIC T85°C	8411 0307 06
LZB33-L-A026-12	0.39	0.52	1170	3.2	2.4	6.1	4.5	6.4	4.7	2400	8.1	17.2	0.75	1.65	c	Ex II 2GD h T6 IIC T85°C	8411 0307 14
LZB33-L-A013-12	0.38	0.51	580	6.4	4.7	12	8.9	12.8	9.4	1180	8.1	17.2	1.02	2.25	c	Ex II 2GD h T6 IIC T85°C	8411 0307 22
LZB33-L-A007-12	0.38	0.51	320	11.5	8.5	21	15.5	23	17	650	8.1	17.2	1.02	2.25	c	Ex II 2GD h T6 IIC T85°C	8411 0307 30
LZB33-L-A005-12	0.38	0.51	260	14.2	10.5	26	19.2	28	21	520	8.1	17.2	1.02	2.25	c	Ex II 2GD h T6 IIC T85°C	8411 0307 48
Anti-clockwise rotation (Keyed shaft)																	
LZB33-L-AV210-11	0.39	0.52	9400	0.4	0.3	0.69	0.51	0.8	0.59	19000	9.5	20.2	0.75	1.65	c	Ex II 2GD h T4 IIC T110°C	8411 0352 42
LZB33-L-AV060-11	0.39	0.52	2600	1.4	1.0	2.4	1.8	2.8	2.1	5350	9.5	20.2	0.75	1.65	c	Ex II 2GD h T6 IIC T85°C	8411 0352 59
LZB33-L-AV033-11	0.39	0.52	1450	2.6	1.9	4.4	3.2	5.2	3.8	3000	9.5	20.2	0.75	1.65	c	Ex II 2GD h T6 IIC T85°C	8411 0352 00
LZB33-L-AV026-11	0.39	0.52	1170	3.2	2.4	5.5	4.1	6.4	4.7	2400	9.5	20.2	0.75	1.65	c	Ex II 2GD h T6 IIC T85°C	8411 0345 91
LZB33-L-AV013-11	0.38	0.51	580	6.4	4.7	11	8.1	12.8	9.4	1180	9.5	20.2	1.02	2.25	c	Ex II 2GD h T6 IIC T85°C	8411 0336 27
LZB33-L-AV007-11	0.38	0.51	320	11.5	8.5	19.5	14.4	23	17	650	9.5	20.2	1.02	2.25	c	Ex II 2GD h T6 IIC T85°C	8411 0352 67
LZB33-L-AV005-11	0.38	0.51	260	14.2	10.5	24	17.7	28	21	520	9.5	20.2	1.02	2.25	c	Ex II 2GD h T6 IIC T85°C	8411 0336 19
LZB33-L-AV0030-11 [2]	0.37	0.50	160	22	16.2	38	28	44	32	340	9.5	20.2	1.5	3.31	d	Ex II 2GD h T6 IIC T85°C	8411 0345 59
Reversible (Keyed shaft)																	
LZB33-L-AR150-11	0.25	0.34	7000	0.34	0.25	0.46	0.34	0.68	0.5	13300	7.9	16.8	0.75	1.65	c	Ex II 2GD h T4 IIC T110°C	8411 0307 63
LZB33-L-AR043-11	0.25	0.34	1960	1.2	0.89	1.6	1.2	2.4	1.8	3800	7.9	16.8	0.75	1.65	c	Ex II 2GD h T6 IIC T85°C	8411 0307 71
LZB33-L-AR024-11	0.25	0.34	1090	2.2	1.6	3.0	2.2	4.4	3.2	2000	7.9	16.8	0.75	1.65	c	Ex II 2GD h T6 IIC T85°C	8411 0307 89
LZB33-L-AR019-11	0.25	0.34	880	2.7	2.0	3.7	2.7	5.4	4.0	1700	7.9	16.8	0.75	1.65	c	Ex II 2GD h T6 IIC T85°C	8411 0307 97
LZB33-L-AR009-11	0.25	0.34	430	5.4	4.0	7.0	5.2	10.8	8.0	800	7.9	16.8	1.02	2.25	c	Ex II 2GD h T6 IIC T85°C	8411 0308 05
LZB33-L-AR005-11	0.25	0.34	240	9.8	7.2	12.6	9.3	19.6	14.5	450	7.9	16.8	1.02	2.25	c	Ex II 2GD h T6 IIC T85°C	8411 0308 13
LZB33-L-AR004-11	0.25	0.34	190	12.1	8.9	15.6	11.5	24	17.8	360	7.9	16.8	1.02	2.25	c	Ex II 2GD h T6 IIC T85°C	8411 0308 21
LZB33-L-AR0026-11 [2]	0.24	0.32	120	19	14	25	18.4	38	28	230	7.9	16.8	1.5	3.31	d	Ex II 2GD h T6 IIC T85°C	8411 0308 70

1) For Shaft loading curves, see page 14.
2) Flange is mounted and supplied with the motor.

NOTE: - If running motors with 100% dry air and no lubrication, performance can be reduced with 5-15% at max output.
- To optimize life time for a lubrication free motor, use lubricated air if the application allows it.

LZB33-L, for mounting with IEC flange (flange has to be ordered separetly)
Data at air pressure 6.3 bar (91 psi)

Model Lubrication free	Max output kW	 hp	Speed at max output r/min	Torque at max output Nm	 lb-ft	Min starting torque Nm	 lb-ft	Stall torque Nm	 lb-ft	Free speed r/min	Air consumption at max output l/s	 cfm	Weight kg	 lb	Shaft loading code	ATEX code	Ordering No.
Clockwise rotation (Keyed shaft)																	
LZB33-L-A013-20	0.38	0.51	580	6.4	4.7	12	8.9	12.8	9.4	1180	8.1	17.2	1.02	2.25	d	Ex II 2GD h T6 IIC T85°C	8411 0352 75
LZB33-L-A007-20	0.38	0.51	320	11.5	8.5	21	15.5	23	17	650	8.1	17.2	1.02	2.25	d	Ex II 2GD h T6 IIC T85°C	8411 0352 83
LZB33-L-A005-20	0.38	0.51	260	14.2	10.5	26	19.2	28	21	520	8.1	17.2	1.02	2.25	d	Ex II 2GD h T6 IIC T85°C	8411 0352 91
LZB33-L-A0030-11	0.37	0.5	160	22.3	16.4	40	30	45	33	340	8.1	17.2	1.5	3.31	d	Ex II 2GD h T6 IIC T85°C	8411 0306 72
Anti-Clockwise rotation (Keyed shaft)																	
LZB33-L-AV0030-11	0.37	0.5	160	22	16.2	38	28	44	32	340	9.5	20.2	1.5	3.31	d	Ex II 2GD h T6 IIC T85°C	8411 0345 59
Reversible (Keyed shaft)																	
LZB33-L-AR0026-11	0.24	0.32	120	19	14	25	18.4	38	28	230	7.9	16.8	1.5	3.31	d	Ex II 2GD h T6 IIC T85°C	8411 0308 70

**Not including the weight of the flange.*

NOTE: - If running motors with 100% dry air and no lubrication, performance can be reduced with 5-15% at max output.
- To optimize life time for a lubrication free motor, use lubricated air if the application allows it.

Dimensions (mm)

All versions

Clockwise

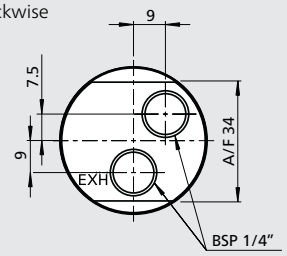

Anti-clockwise

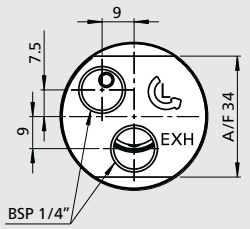

Reversible

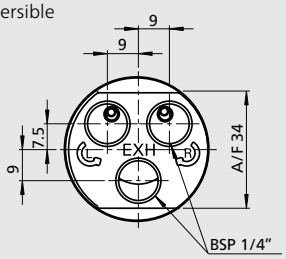

Keyed shaft (-11)

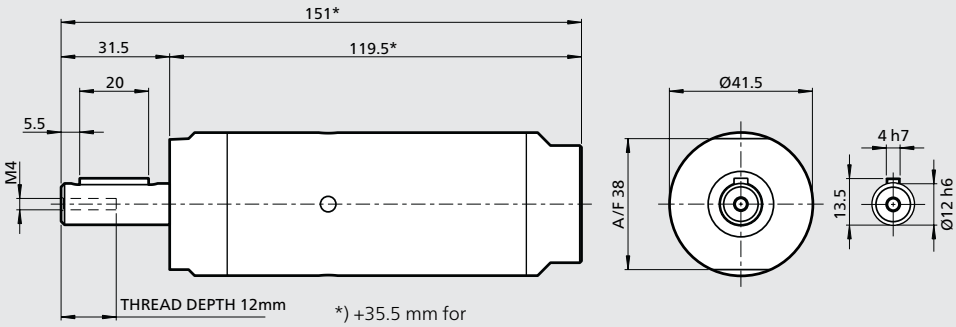

*) +35.5 mm for

LZB33-L-A013	LZB33-L-AV013	LZB33-L-AR009
LZB33-L-A007	LZB33-L-AV007	LZB33-L-AR005
LZB33-L-A005	LZB33-L-AV005	LZB33-L-AR004

Threaded shaft (-12)

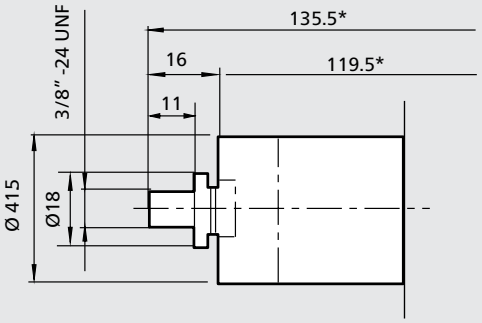

Optional mounting

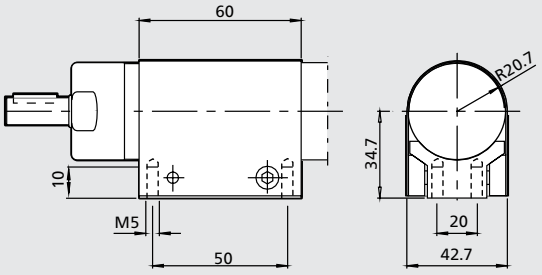

Foot
Ordering No. 4430 0162 80

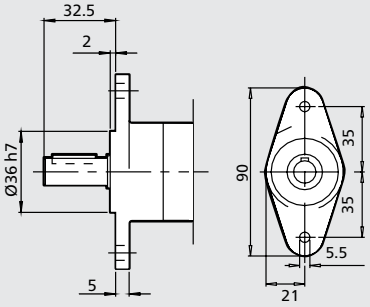

Flange
Ordering No.
4110 0878 85 with holes
4110 0878 80 without holes

LZB33-L-A0030
LZB33-L-AV0030
LZB33-L-AR0026

*) - 32 mm
LZB33-L-A013-20
LZB33-L-A007-20
LZB33-L-A005-20

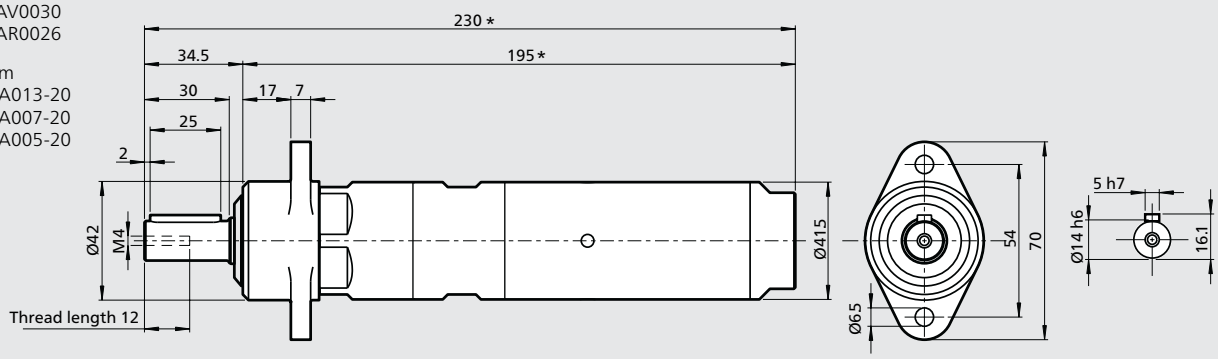

Dimensions (mm)

IECff85

Ordering No. 4430 2134 80

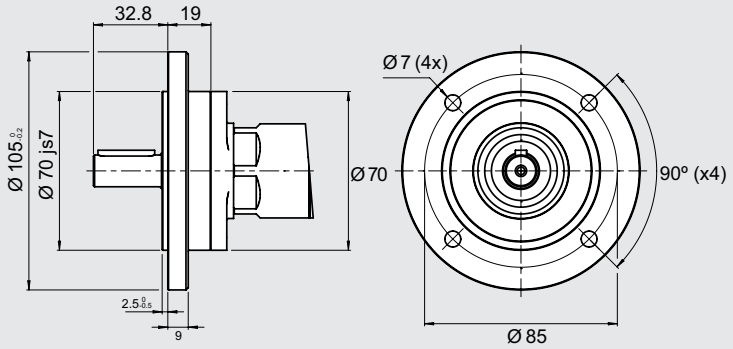

This flange can be mounted only on

LZB33-L-A013-20	LZB33-L-A0030-11
LZB33-L-A007-20	LZB33-L-AV0030-11
LZB33-L-A005-20	LZB33-L-AR0026-11

IECff130

Ordering No. 4430 2287 80

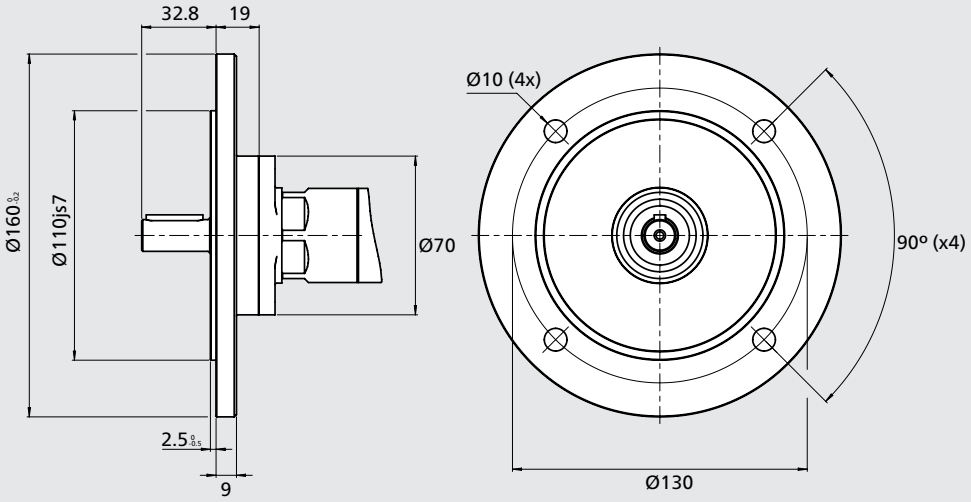

This flange can be mounted only on

LZB33-L-A013-20	LZB33-L-A0030-11
LZB33-L-A007-20	LZB33-L-AV0030-11
LZB33-L-A005-20	LZB33-L-AR0026-11

Vane motors **LZB34-RL**

Stainless steel and lubrication free

0.25 – 0.39 kW
0.34 – 0.52 hp



Material in parts:

- Back head and front part stainless steel:
  ISO 683/XIII Type 17, SS 14 2346, DIN 17440 X12CrNiS188
- Outgoing shaft and casing/gear rim stainless steel:
  ISO 683/XIII Type 9b, SS 14 2321, DIN 17440 X22CrNi17
- 100% Silicon free
- Grease that conforms to Food Grade regulations

EX certification valid for fixture mounted use only with a maximum surrounding temperature of +40°C (104°F).

For optional stainless steel motor cell, vane kits and other accessories see chapter Accessories.

Data at air pressure 6.3 bar (91 psi)

Model Lubrication free	Max output kW	 hp	Speed at max output r/min	Torque at max output Nm	 lb-ft	Min starting torque Nm	 lb-ft	Stall torque Nm	 lb-ft	Free speed r/min	Air consumption at max output l/s	 cfm	Weight kg	 lb	Shaft loading code [1]	ATEX code	Ordering No.
Clockwise rotation (Keyed shaft)																	
LZB34-RL-A210-11	0.39	0.52	9400	0.4	0.3	0.76	0.56	0.8	0.59	19000	8.1	17.2	0.95	2.09	c	Ex II 2GD h T4 IIC T110°C	8411 0338 41
LZB34-RL-A060-11	0.39	0.52	2600	1.4	1.0	2.7	2.0	2.8	2.1	5350	8.1	17.2	0.95	2.09	c	Ex II 2GD h T6 IIC T85°C	8411 0338 58
LZB34-RL-A033-11	0.39	0.52	1450	2.6	1.9	4.9	3.6	5.2	3.8	3000	8.1	17.2	0.95	2.09	c	Ex II 2GD h T6 IIC T85°C	8411 0338 66
LZB34-RL-A026-11	0.39	0.52	1170	3.2	2.4	6.1	4.5	6.4	4.7	2400	8.1	17.2	0.95	2.09	c	Ex II 2GD h T6 IIC T85°C	8411 0338 74
LZB34-RL-A013-11	0.38	0.51	580	6.4	4.7	12	8.9	12.8	9.4	1180	8.1	17.2	1.2	2.65	c	Ex II 2GD h T6 IIC T85°C	8411 0338 82
LZB34-RL-A007-11	0.38	0.51	320	11.5	8.5	21	15.5	23	17	650	8.1	17.2	1.2	2.65	c	Ex II 2GD h T6 IIC T85°C	8411 0338 90
LZB34-RL-A005-11	0.38	0.51	260	14.2	10.5	26	19.2	28	21	520	8.1	17.2	1.2	2.65	c	Ex II 2GD h T6 IIC T85°C	8411 0339 08
Reversible (Keyed shaft)																	
LZB34-RL AR150-11	0.25	0.34	7000	0.34	0.25	0.46	0.34	0.68	0.5	13300	7.9	16.8	0.95	2.09	c	Ex II 2GD h T4 IIC T110°C	8411 0339 16
LZB34-RL-AR043-11	0.25	0.34	1960	1.2	0.89	1.6	1.2	2.4	1.8	3800	7.9	16.8	0.95	2.09	c	Ex II 2GD h T6 IIC T85°C	8411 0339 24
LZB34-RL-AR024-11	0.25	0.34	1090	2.2	1.6	3.0	2.2	4.4	3.2	2000	7.9	16.8	0.95	2.09	c	Ex II 2GD h T6 IIC T85°C	8411 0339 32
LZB34-RL-AR019-11	0.25	0.34	880	2.7	2.0	3.7	2.7	5.4	4.0	1700	7.9	16.8	0.95	2.09	c	Ex II 2GD h T6 IIC T85°C	8411 0339 40
LZB34-RL-AR009-11	0.25	0.34	430	5.4	4.0	7.0	5.2	10.8	8.0	800	7.9	16.8	1.2	2.65	c	Ex II 2GD h T6 IIC T85°C	8411 0339 57
LZB34-RL-AR005-11	0.25	0.34	240	9.8	7.2	12.6	9.3	19.6	14.5	450	7.9	16.8	1.2	2.65	c	Ex II 2GD h T6 IIC T85°C	8411 0339 65
LZB34-RL-AR004-11	0.25	0.34	190	12.1	8.9	15.6	11.5	24	17.7	360	7.9	16.8	1.2	2.65	c	Ex II 2GD h T6 IIC T85°C	8411 0339 73

[1] *For Shaft loading curves, see page 14.*

NOTE: - If running motors with 100% dry air and no lubrication, performance can be reduced with 5-15% at max output.
- To optimize life time for a lubrication free motor, use lubricated air if the application allows it.

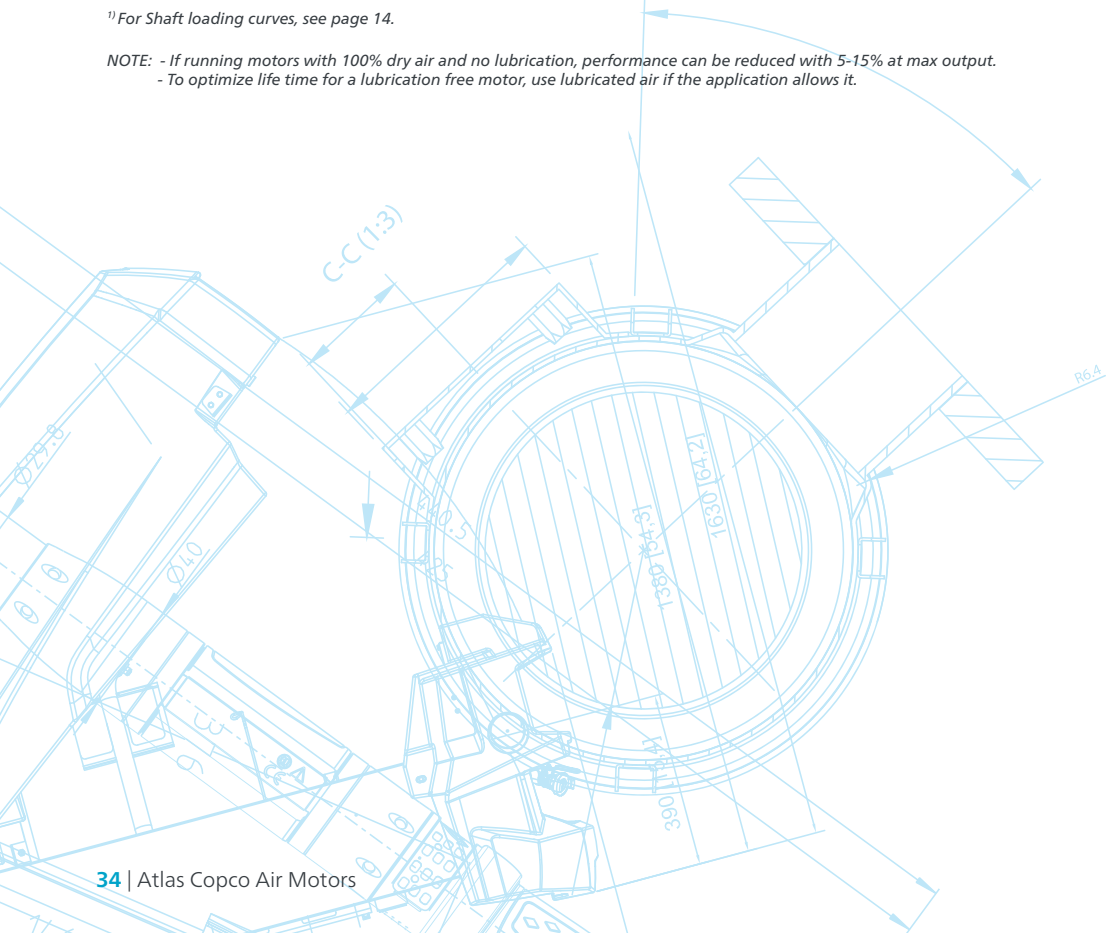

Clockwise

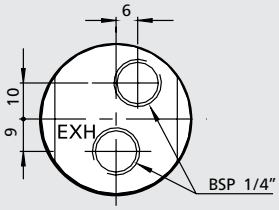

Reversible

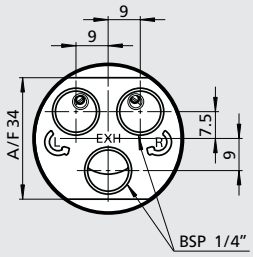

Keyed shaft (-11)

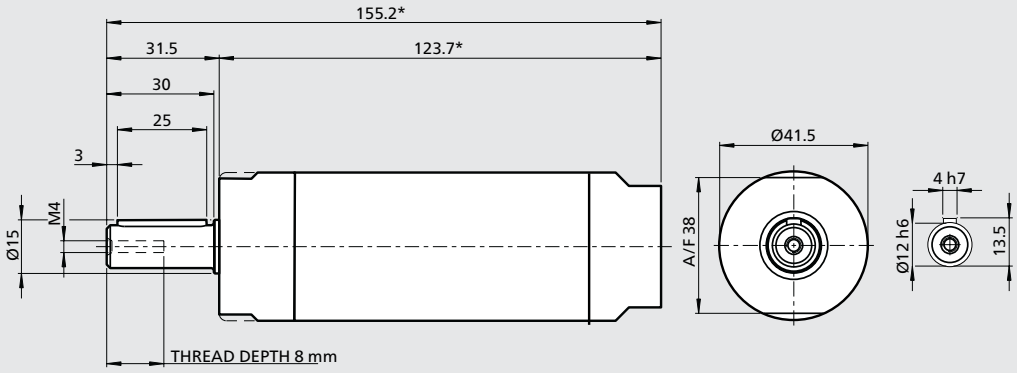

*) +34.5 mm for

LZB34-RL-A013	LZB34-RL-AR009
LZB34-RL-A007	LZB34-RL-AR005
LZB34-RL-A005	LZB34-RL-AR004

Optional mounting

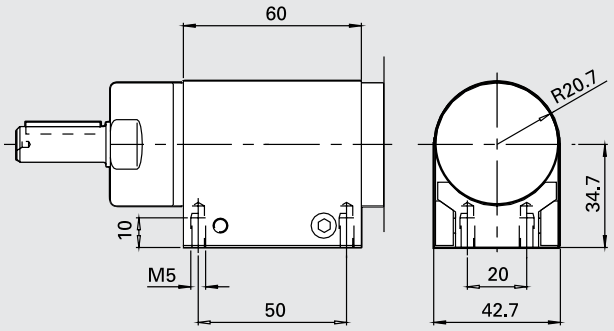

Foot
Ordering No. 4430 0855 80

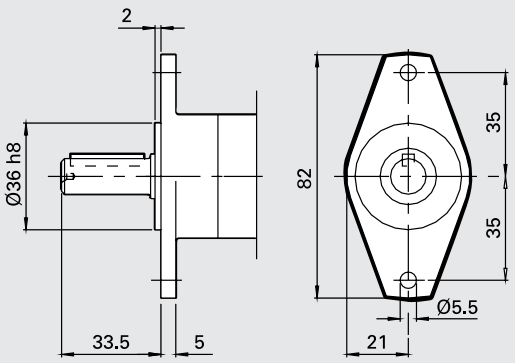

Flange
Ordering No. 4430 0850 80

LZB33-L, LZB34-RL: Performance curves at air pressure 6.3 bar (91 psi)

Non-reversible (A and AV)

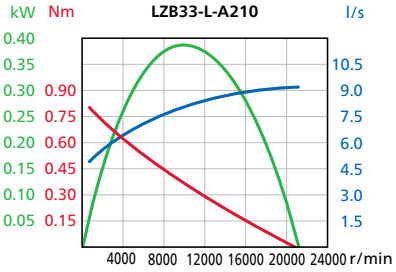

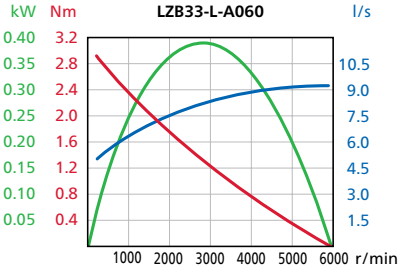

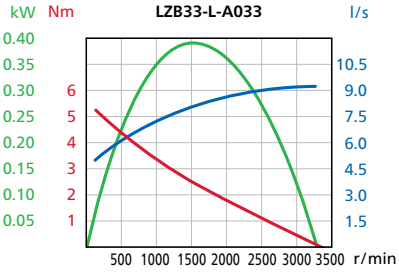

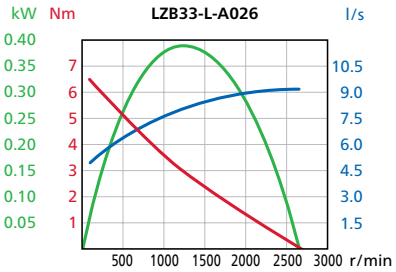

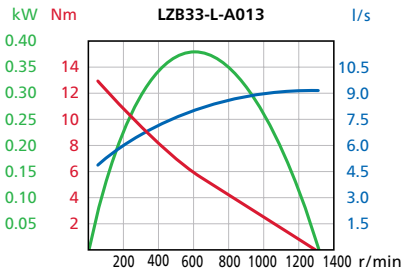

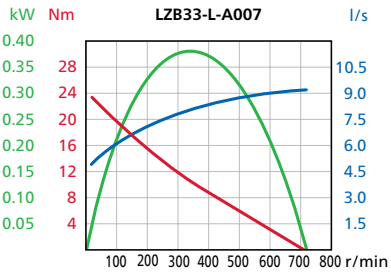

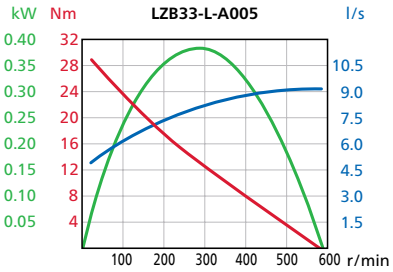

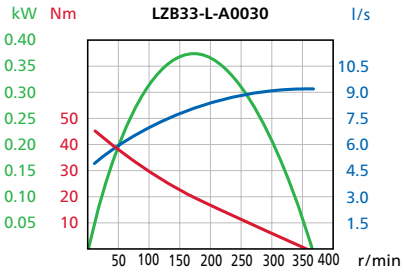

LZB33-L, LZB34-RL: Performance curves at air pressure 6.3 bar (91 psi)

Reversible (AR)

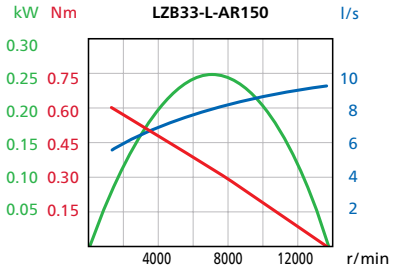

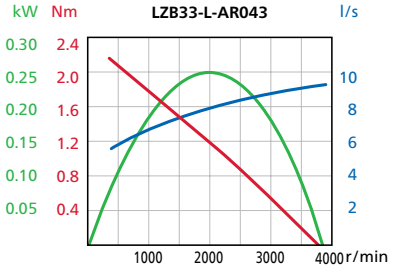

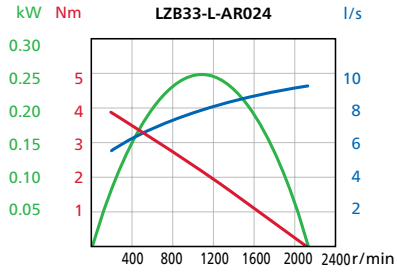

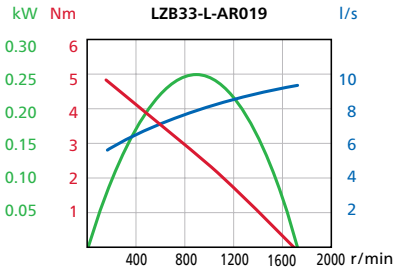

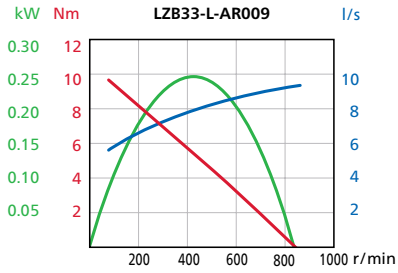

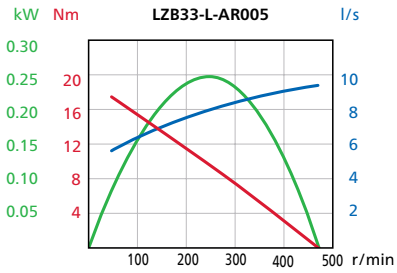

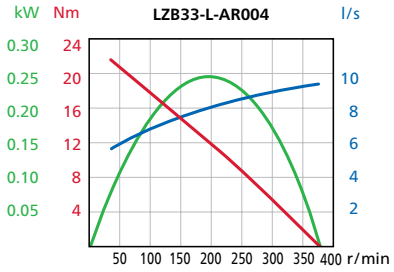

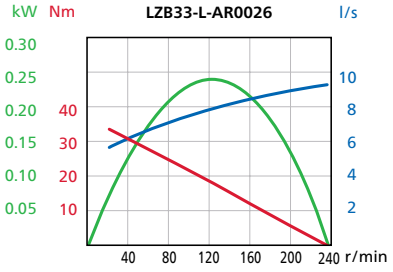

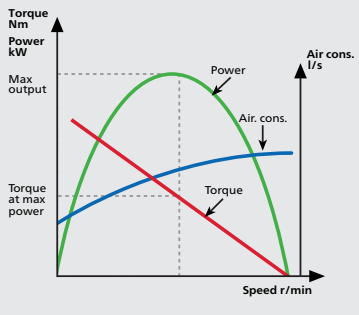

Conversion factors

1 kW	= 1.34 hp
1 Nm	= 0.74 lbf - ft
1 l/s	= 2.1 cfm
1 hp	= 0.75 kW
1 lbf-ft	= 1.36 Nm
1 cfm	= 0.47 l/s

For information about performance curves, see page 6.

Vane motors **LZB33-L-LR**

Low speed, low torque, lubrication free and reversible
LZB34-RL-LR
Stainless steel, low speed, low torque, lubrication free and reversible



Maximum permitted torque 14 Nm (10.3 lb_f·ft)

For applications where low speed and high torque are required LZB33 high torque/low speed motors should be considered, see page 38. Within their working range these motors have a very steep torque curve. Speed and air consumption are relatively constant regardless of the load.

Stainless steel Version:

- 100% Silicon free
- Grease that conforms to Food Grade regulations

EX certification valid for fixture mounted use only with a maximum surrounding temperature of +40°C (104°F).

For optional stainless steel motor cell, vane kits and other accessories see chapter Accessories.

Data at air pressure 6.3 bar (91 psi)

Model Lubrication free	Free speed r/min	Air consumption at free speed l/s	 cfm	Weight kg	 lb	Shaft loading code [1]	ATEX code	Ordering No.
Reversible (Keyed shaft)								
LZB33-L-LR200-11	180	9.9	21.0	1.25	2.78	c	Ex II 2GD h T6 IIC T85°C	8411 0308 62
LZB33-L-LR44-11	42	9.9	21.0	1.55	3.44	c	Ex II 2GD h T6 IIC T85°C	8411 0308 54
LZB33-L-LR20-11	18	9.9	21.0	1.55	3.44	c	Ex II 2GD h T6 IIC T85°C	8411 0308 47
LZB33-L-LR10-11	10	9.9	21.0	1.8	4.0	c	Ex II 2GD h T6 IIC T85°C	8411 0308 39
Stainless steel Reversible (Keyed shaft)								
LZB34-RL-LR200-11	180	9.9	21.0	1.45	3.2	c	Ex II 2GD h T6 IIC T85°C	8411 0343 44
LZB34-RL-LR44-11	42	9.9	21.0	1.75	3.86	c	Ex II 2GD h T6 IIC T85°C	8411 0343 51
LZB34-RL-LR20-11	18	9.9	21.0	1.75	3.86	c	Ex II 2GD h T6 IIC T85°C	8411 0343 69
LZB34-RL-LR10-11	10	9.9	21.0	2.0	4.4	c	Ex II 2GD h T6 IIC T85°C	8411 0343 77

[1] *For Shaft loading curves, see page 14.*

NOTE: - If running motors with 100% dry air and no lubrication, performance can be reduced with 10-20% at free speed.
- To optimize life time for a lubrication free motor, use lubricated air if the application allows it.

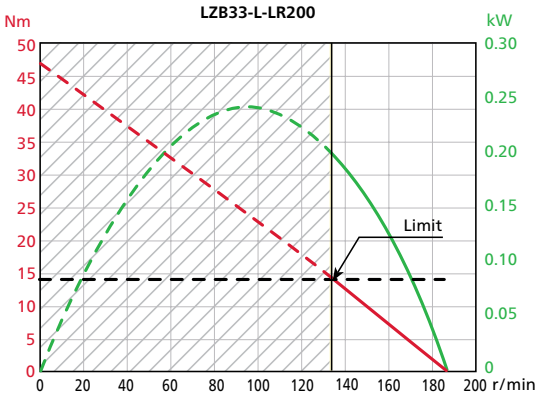

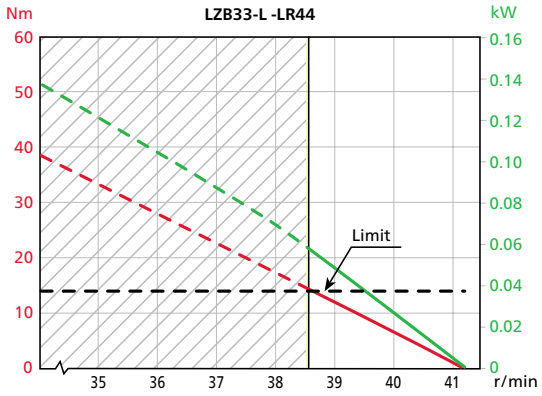

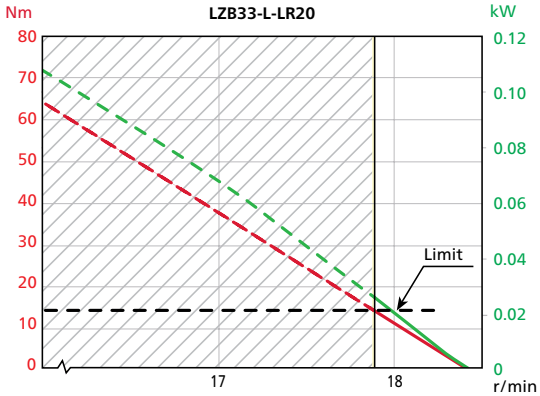

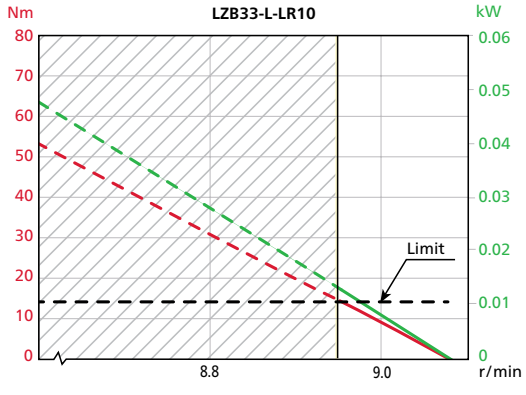

Dimensions (mm)

Conversion factor 1 mm = 0.04 inch

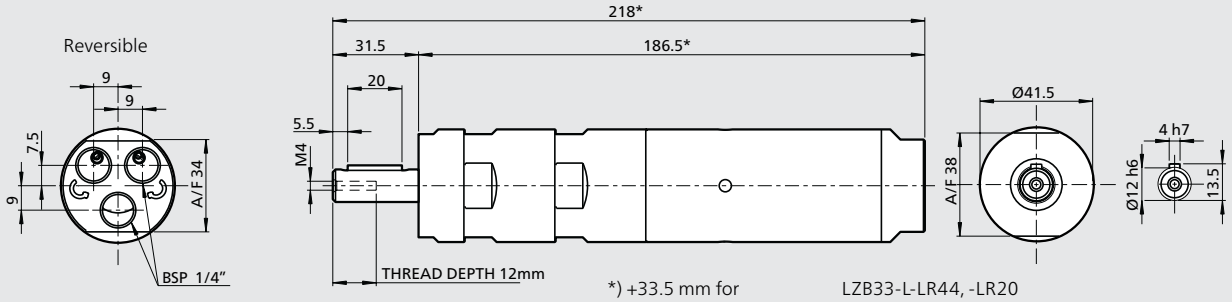

*) +33.5 mm for LZB33-L-LR44, -LR20
+67 mm for LZB33-L-LR10

Optional mounting

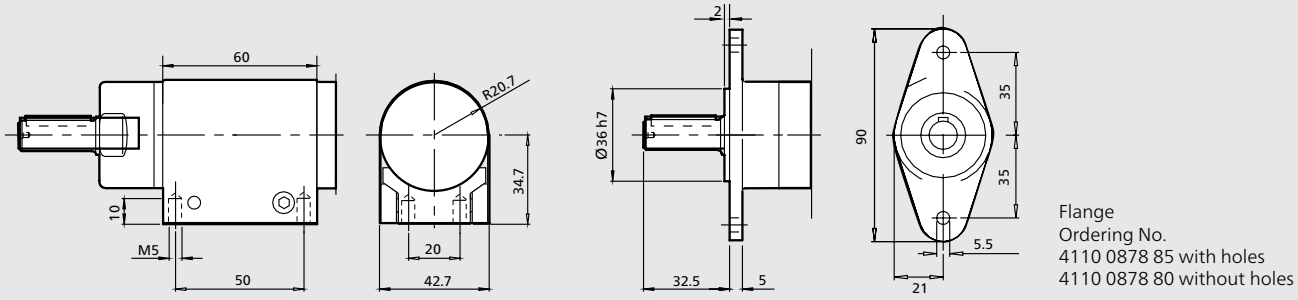

Flange
Ordering No.
4110 0878 85 with holes
4110 0878 80 without holes

Foot
Ordering No. 4430 0162 80

Dimensions (mm)

Conversion factor 1 mm = 0.04 inch

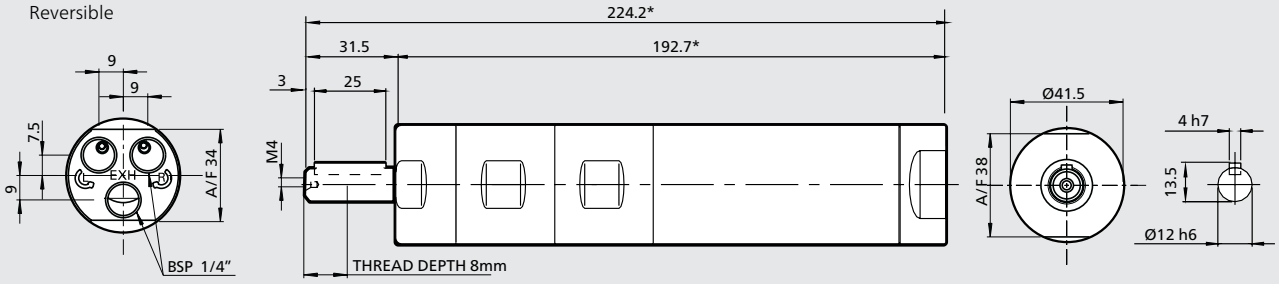

*) +35 mm for LZB34-RL - LR44, -LR20
+70 mm for LZB34-RL-LR-10

Optional mounting

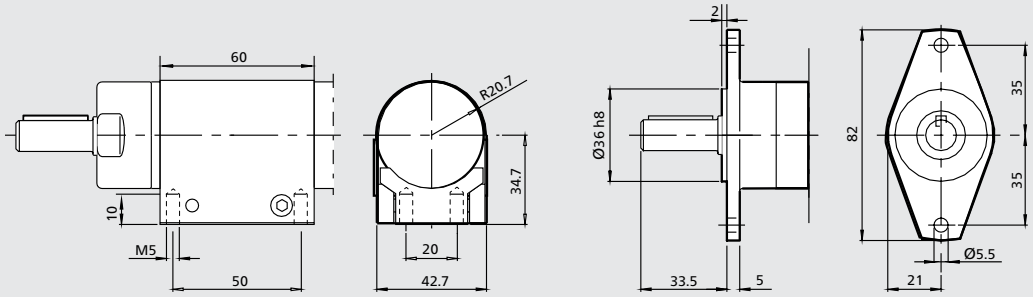

Foot
Ordering No. 4430 0855 80

Flange
Ordering No. 4430 0850 80

Vane motors **LZB33-L**

High torque and lubrication free

0.23 – 0.37 kW
0.31 – 0.50 hp



EX certification valid for fixture mounted use only with a maximum surrounding temperature of +40°C (104°F).

For optional vanes and accessories see chapter Accessories.

Data at air pressure 6.3 bar (91 psi)

Model Lubrication free	Max output kW	 hp	Speed at max output r/min	Torque at max output Nm	 lb-ft	Min starting torque Nm	 lb-ft	Stall torque Nm	 lb-ft	Free speed r/min	Air consumption at max output l/s	 cfm	Weight kg	 lb	Shaft loading code [1]	ATEX code	Ordering No.
Clockwise rotation (Keyed shaft)																	
LZB33-L-A0020-11	0.37	0.50	100	36	27	66	49	72	53	210	8.1	17.2	2.6	5.8	g	Ex II 2GD h T6 IIC T85°C	8411 0322 07
LZB33-L-A0015-11	0.37	0.50	75	49	36	90	66	98	72	150	8.1	17.2	2.6	5.8	g	Ex II 2GD h T6 IIC T85°C	8411 0322 15
LZB33-L-A0011-11	0.37	0.50	55	65	48	118	87	130	96	115	8.1	17.2	2.6	5.8	g	Ex II 2GD h T6 IIC T85°C	8411 0322 23
LZB33-L-A0008-11	0.37	0.50	41	88	65	158	117	176	130	80	8.1	17.2	2.6	5.8	g	Ex II 2GD h T6 IIC T85°C	8411 0322 31
LZB33-L-A0007-11	0.37	0.50	33	110	81	200	148	220	162	70	8.1	17.2	2.6	5.8	g	Ex II 2GD h T6 IIC T85°C	8411 0322 49
LZB33-L-A0005-11	0.36	0.48	24	145	107	274	202	290	214	50	8.1	17.2	5.0	11.1	h	Ex II 2GD h T6 IIC T85°C	8411 0322 56
LZB33-L-A0004-11	0.36	0.48	18	195	144	360	266	390	288	38	8.1	17.2	5.0	11.1	h	Ex II 2GD h T6 IIC T85°C	8411 0322 64
LZB33-L-A0003-11	0.36	0.48	13	260	192	490	361	520	384	26	8.1	17.2	5.0	11.1	h	Ex II 2GD h T6 IIC T85°C	8411 0322 72
LZB33-L-A0002-11	0.36	0.48	10	349	257	680	502	698	515	20	8.1	17.2	5.0	11.1	h	Ex II 2GD h T6 IIC T85°C	8411 0322 80
Reversible (Keyed shaft)																	
LZB33-L-AR0015-11	0.24	0.32	75	31	23	41	30	62	46	140	7.9	16.8	2.6	5.8	g	Ex II 2GD h T6 IIC T85°C	8411 0323 06
LZB33-L-AR0011-11	0.24	0.32	55	42	31	56	41	84	62	100	7.9	16.8	2.6	5.8	g	Ex II 2GD h T6 IIC T85°C	8411 0323 14
LZB33-L-AR0008-11	0.24	0.32	41	56	41	74	55	112	83	75	7.9	16.8	2.6	5.8	g	Ex II 2GD h T6 IIC T85°C	8411 0323 22
LZB33-L-AR0006-11	0.24	0.32	31	75	55	100	74	150	111	60	7.9	16.8	2.6	5.8	g	Ex II 2GD h T6 IIC T85°C	8411 0323 30
LZB33-L-AR0005-11	0.24	0.32	25	93	69	125	92	186	137	45	7.9	16.8	2.6	5.8	g	Ex II 2GD h T6 IIC T85°C	8411 0323 48
LZB33-L-AR0004-11	0.23	0.31	18	120	89	169	125	240	177	35	7.9	16.8	5.0	11.1	h	Ex II 2GD h T6 IIC T85°C	8411 0323 55
LZB33-L-AR0003-11	0.23	0.31	13	165	122	230	170	330	243	25	7.9	16.8	5.0	11.1	h	Ex II 2GD h T6 IIC T85°C	8411 0323 63
LZB33-L-AR0002-11	0.23	0.31	10	220	162	305	225	440	325	20	7.9	16.8	5.0	11.1	h	Ex II 2GD h T6 IIC T85°C	8411 0323 71
LZB33-L-AR0001-11	0.23	0.31	7	300	221	412	304	600	443	14	7.9	16.8	5.0	11.1	h	Ex II 2GD h T6 IIC T85°C	8411 0323 89

[1] *For Shaft loading curves, see page 14.*

NOTE: - If running motors with 100% dry air and no lubrication, performance can be reduced with 5-15% at max output.
- To optimize life time for a lubrication free motor, use lubricated air if the application allows it.

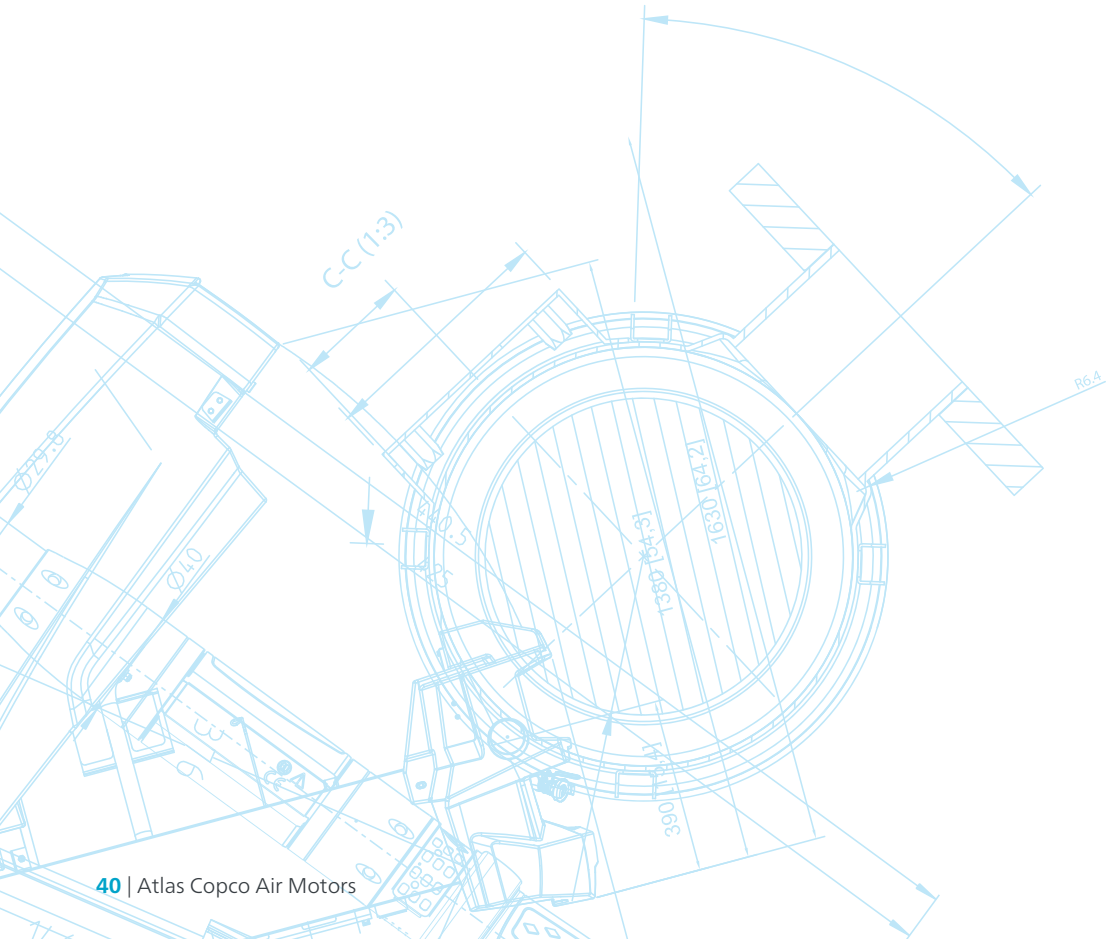

All versions

Clockwise

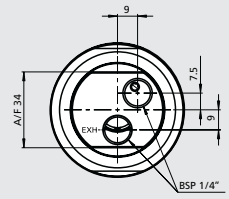

Reversible

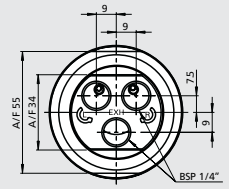

Clockwise
LZB33-L-A0020
LZB33-L-A0015
LZB33-L-A0011
LZB33-L-A0008
LZB33-L-A0007

Reversible
LZB33-L-AR0015
LZB33-L-AR0011
LZB33-L-AR0008
LZB33-L-AR0006
LZB33-L-AR0005

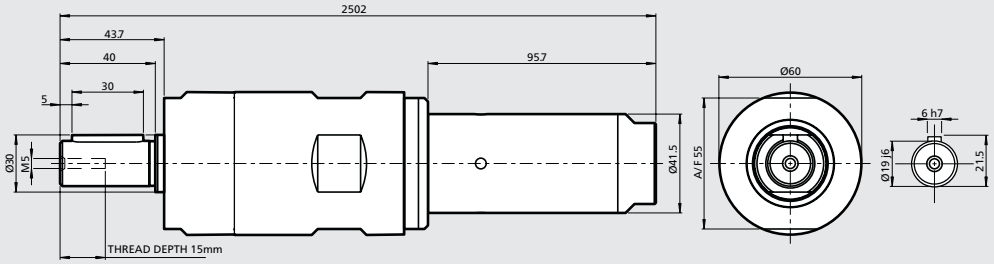

Optional mounting

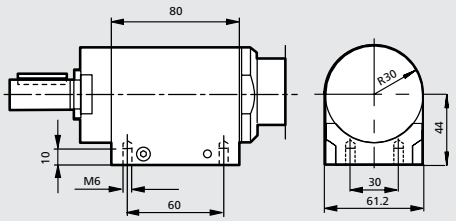

Foot
Ordering No. 4430 0178 80

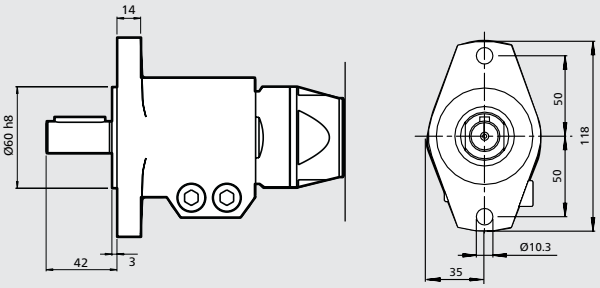

Flange
Ordering No. 4430 0569 84

Clockwise
LZB33-L-A0005
LZB33-L-A0004
LZB33-L-A0003
LZB33-L-A0002

Reversible
LZB33-L-AR0004
LZB33-L-AR0003
LZB33-L-AR0002
LZB33-L-AR0001

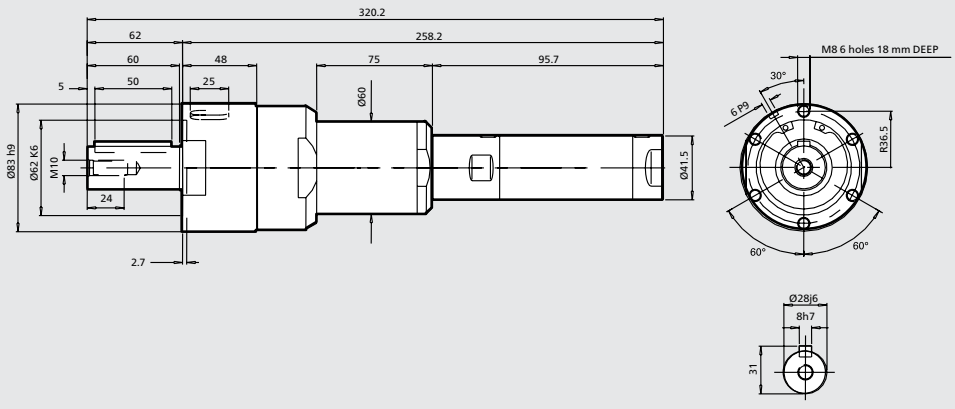

LZB33-L high torque motors: Performance curves at 6.3 bar (91 psi)

Non-reversible (A)

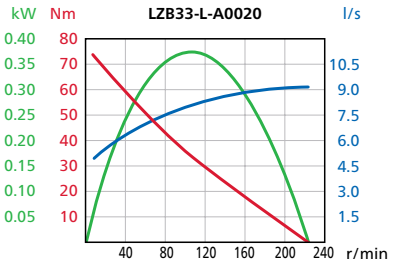

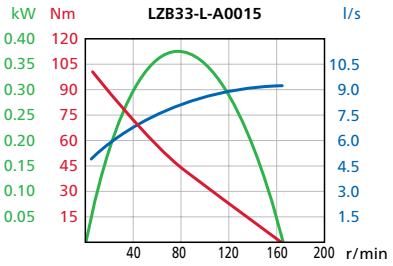

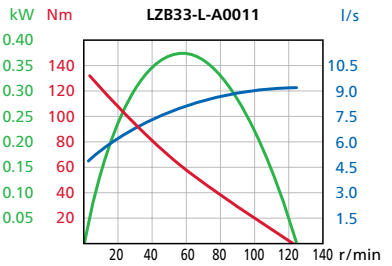

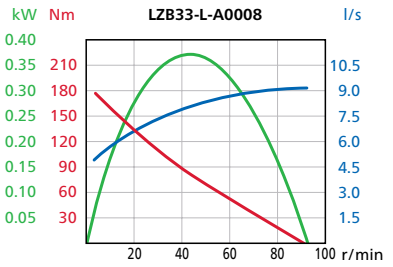

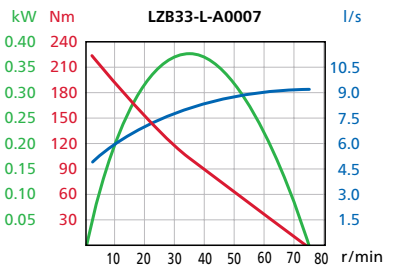

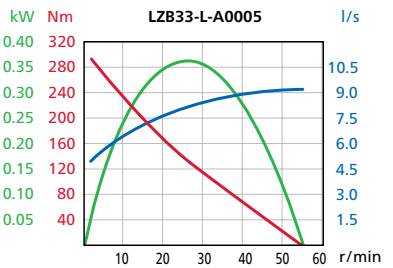

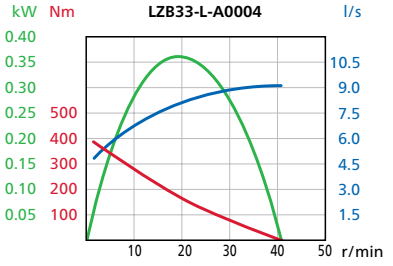

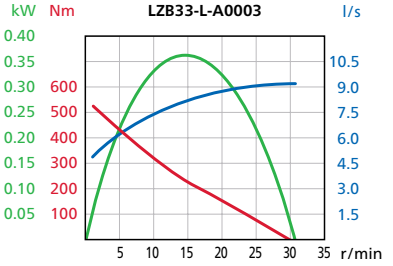

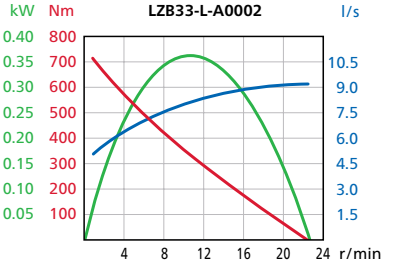

Reversible (AR)

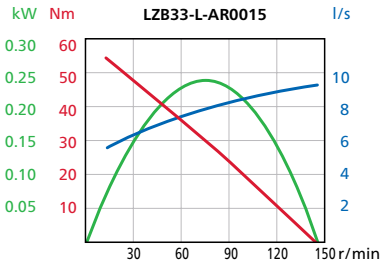

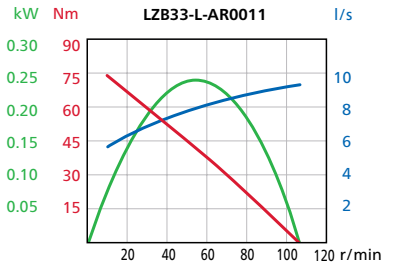

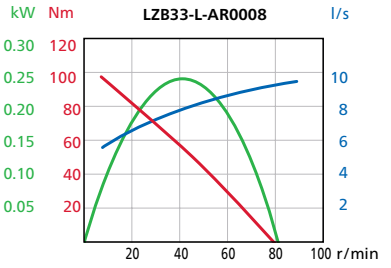

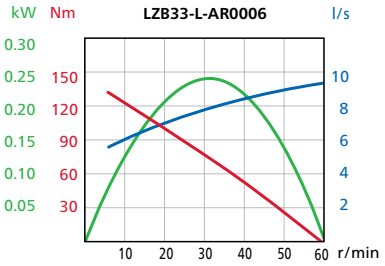

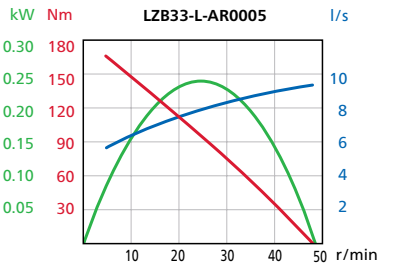

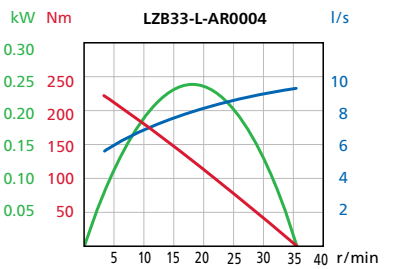

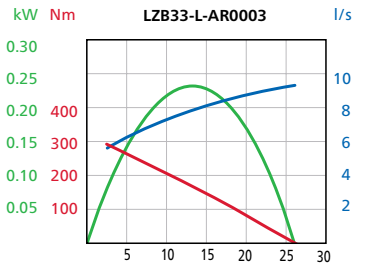

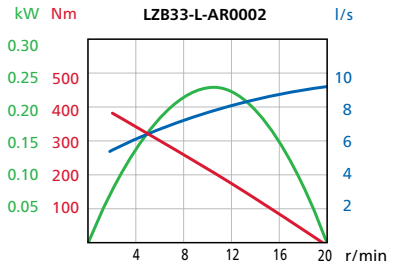

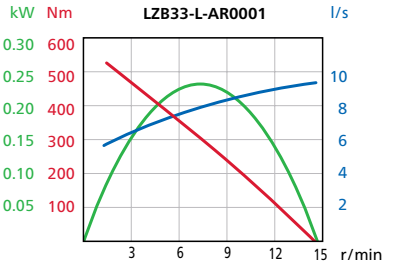

Vane motors **LZB33-LB**

Brake module, lubrication free and reversible
LZB34-RLB
Stainless steel, brake module, lubrication free and reversible

0.23 – 0.25 kW
0.31 – 0.34 hp



Braking torque from 0.55–520 Nm.

The brake is activated by spring force and released by air pressure.

Stainless steel Version:

- 100% Silicon free
- Grease that conforms to Food Grade regulations

EX certification valid for fixture mounted use only with a maximum surrounding temperature of +40°C (104°F).

For optional stainless steel motor cell, vane kits and other accessories see chapter Accessories.

Data at air pressure 6.3 bar (91 psi)

Model Lubrication free	Max output kW	 hp	Speed at max output r/min	Torque at max output Nm	 lb-ft	Min starting torque Nm	 lb-ft	Stall torque Nm	 lb-ft	Braking torque Nm	 lb-ft	Free speed r/min	Air consumption at max output l/s	 cfm	Weight kg	 lb	Shaft loading code [1]	ATEX code	Ordering No.
Reversible (Keyed shaft)																			
LZB33-LB-AR150-11	0.25	0.34	7000	0.34	0.25	0.46	0.34	0.68	0.5	0.55	0.4	13300	7.9	16.8	1.35	2.97	c	Ex II 2GD h T4 IIC T110°C	8411 0340 05
LZB33-LB-AR043-11	0.25	0.34	1960	1.2	0.89	1.6	1.2	2.4	1.8	2.0	1.5	3800	7.9	16.8	1.35	2.97	c	Ex II 2GD h T6 IIC T85°C	8411 0340 13
LZB33-LB-AR024-11	0.25	0.34	1090	2.2	1.6	3.0	2.2	4.4	3.2	3.5	2.6	2000	7.9	16.8	1.35	2.97	c	Ex II 2GD h T6 IIC T85°C	8411 0340 21
LZB33-LB-AR019-11	0.25	0.34	880	2.7	2.0	3.7	2.7	5.4	4.0	4.4	3.2	1700	7.9	16.8	1.35	2.97	c	Ex II 2GD h T6 IIC T85°C	8411 0340 39
LZB33-LB-AR009-11	0.25	0.34	430	5.4	4.0	7.0	5.2	10.8	8.0	8.9	6.6	800	7.9	16.8	1.63	3.59	c	Ex II 2GD h T6 IIC T85°C	8411 0340 47
LZB33-LB-AR005-11	0.25	0.34	240	9.8	7.2	12.6	9.3	19.6	14.5	16	12	450	7.9	16.8	1.63	3.59	c	Ex II 2GD h T6 IIC T85°C	8411 0340 54
LZB33-LB-AR004-11	0.25	0.34	190	12.1	8.9	15.6	11.5	24	17.8	20	15	360	7.9	16.8	1.63	3.59	c	Ex II 2GD h T6 IIC T85°C	8411 0340 62
LZB33-LB-AR0026-11 [2]	0.24	0.32	120	19	14	20	14.8	38	28	32	24	230	7.9	16.8	2.1	4.6	d	Ex II 2GD h T6 IIC T85°C	8411 0340 70
LZB33-LB-AR0015-11	0.24	0.32	75	31	23	41	30	62	46	52	38	140	7.9	16.8	3.2	7.0	g	Ex II 2GD h T6 IIC T85°C	8411 0340 88
LZB33-LB-AR0011-11	0.24	0.32	55	42	31	56	41	84	62	71	52	100	7.9	16.8	3.2	7.0	g	Ex II 2GD h T6 IIC T85°C	8411 0340 96
LZB33-LB-AR0008-11	0.24	0.32	41	56	41	74	55	112	83	93	67	75	7.9	16.8	3.2	7.0	g	Ex II 2GD h T6 IIC T85°C	8411 0341 04
LZB33-LB-AR0006-11	0.24	0.32	31	75	55	100	74	150	111	130	95	60	7.9	16.8	3.2	7.0	g	Ex II 2GD h T6 IIC T85°C	8411 0341 12
LZB33-LB-AR0005-11	0.24	0.32	25	93	69	125	92	186	137	160	120	45	7.9	16.8	3.2	7.0	g	Ex II 2GD h T6 IIC T85°C	8411 0341 20
LZB33-LB-AR0004-11	0.23	0.31	18	120	89	169	125	240	177	210	160	35	7.9	16.8	5.6	12.3	h	Ex II 2GD h T6 IIC T85°C	8411 0341 38
LZB33-LB-AR0003-11	0.23	0.31	13	165	122	230	170	330	243	290	210	25	7.9	16.8	5.6	12.3	h	Ex II 2GD h T6 IIC T85°C	8411 0341 46
LZB33-LB-AR0002-11	0.23	0.31	10	220	162	305	225	440	325	380	280	20	7.9	16.8	5.6	12.3	h	Ex II 2GD h T6 IIC T85°C	8411 0341 53
LZB33-LB-AR0001-11	0.23	0.31	7	300	221	412	304	600	443	520	380	14	7.9	16.8	5.6	12.3	h	Ex II 2GD h T6 IIC T85°C	8411 0341 61
Stainless steel Reversible (Keyed shaft)																			
LZB34-RLB-AR150-11	0.25	0.34	7000	0.34	0.25	0.46	0.34	0.68	0.5	0.55	0.4	13300	7.9	16.8	1.39	3.06	c	Ex II 2GD h T4 IIC T110°C	8411 0341 79
LZB34-RLB-AR043-11	0.25	0.34	1960	1.2	0.89	1.6	1.2	2.4	1.8	2.0	1.5	3800	7.9	16.8	1.39	3.06	c	Ex II 2GD h T6 IIC T85°C	8411 0341 87
LZB34-RLB-AR024-11	0.25	0.34	1090	2.2	1.6	3.0	2.2	4.4	3.2	3.5	2.6	2000	7.9	16.8	1.39	3.06	c	Ex II 2GD h T6 IIC T85°C	8411 0341 95
LZB34-RLB-AR019-11	0.25	0.34	880	2.7	2.0	3.7	2.7	5.4	4.0	4.4	3.2	1700	7.9	16.8	1.39	3.06	c	Ex II 2GD h T6 IIC T85°C	8411 0342 03
LZB34-RLB-AR009-11	0.25	0.34	430	5.4	4.0	7.0	5.2	10.8	8.0	9.0	6.6	800	7.9	16.8	1.66	3.66	c	Ex II 2GD h T6 IIC T85°C	8411 0342 11
LZB34-RLB-AR005-11	0.25	0.34	240	9.8	7.2	12.6	9.3	19.6	14.5	16	12	450	7.9	16.8	1.66	3.66	c	Ex II 2GD h T6 IIC T85°C	8411 0342 29
LZB34-RLB-AR004-11	0.25	0.34	190	12.1	8.9	15.6	11.5	24	17.7	20	15	360	7.9	16.8	1.66	3.66	c	Ex II 2GD h T6 IIC T85°C	8411 0342 37

[1] *For Shaft loading curves, see page 14.*

[2] *Flange is mounted and supplied with the motor.*

The brake needs minimum 3 bar to release. Performance curves same as standard motors, see page 35 and 40.

NOTE: - If running motors with 100% dry air and no lubrication, performance can be reduced with 5-15% at max output.
- To optimize life time for a lubrication free motor, use lubricated air if the application allows it.

Reversible with brake

LZB33-LB-AR150
LZB33-LB-AR043
LZB33-LB-AR024
LZB33-LB-AR019

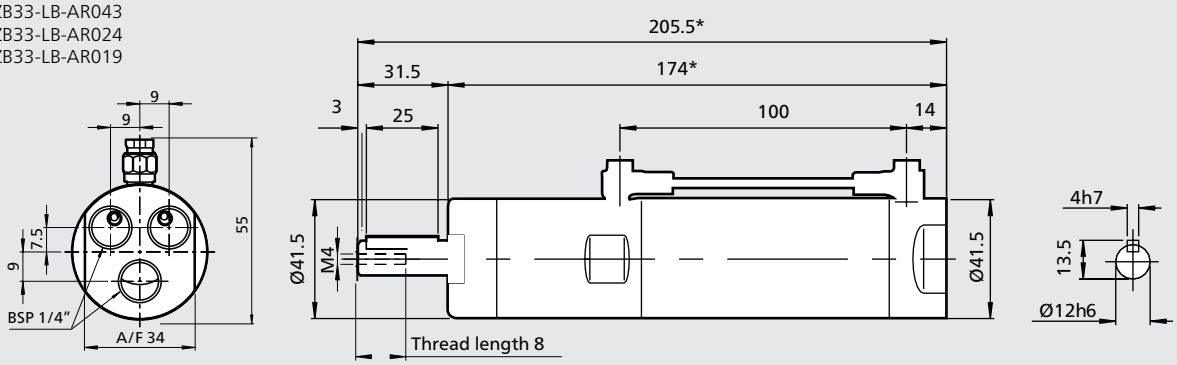

*) +4 mm for LZB34-RLB-AR150
LZB34-RLB-AR043
LZB34-RLB-AR024
LZB34-RLB-AR019

*) +34 mm for LZB33-LB-AR009
LZB33-LB-AR005
LZB33-LB-AR004

*) +39 mm for LZB34-RLB-AR009
LZB34-RLB-AR005
LZB34-RLB-AR004

Optional mounting

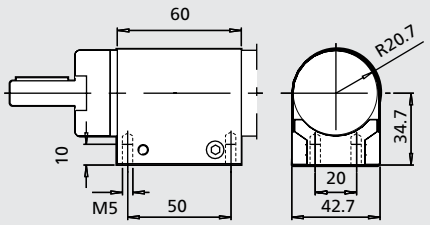

Foot
Ordering No. 4430 0162 80

Stainless foot
Ordering No. 4430 0855 80

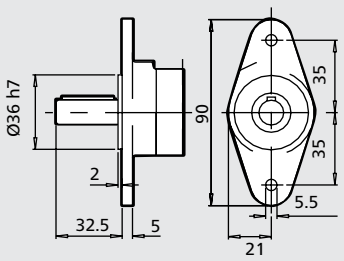

LZB33-LB, Flange
Ordering No.
4110 0878 85 with holes
4110 0878 80 without holes

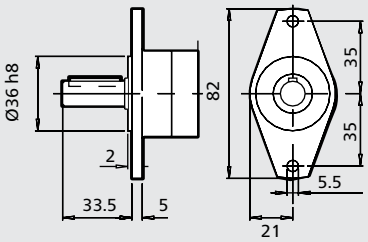

LZB34-RLB, Stainless flange
Ordering No. 4430 0850 80

Reversible with brake

LZB33-LB-AR0026

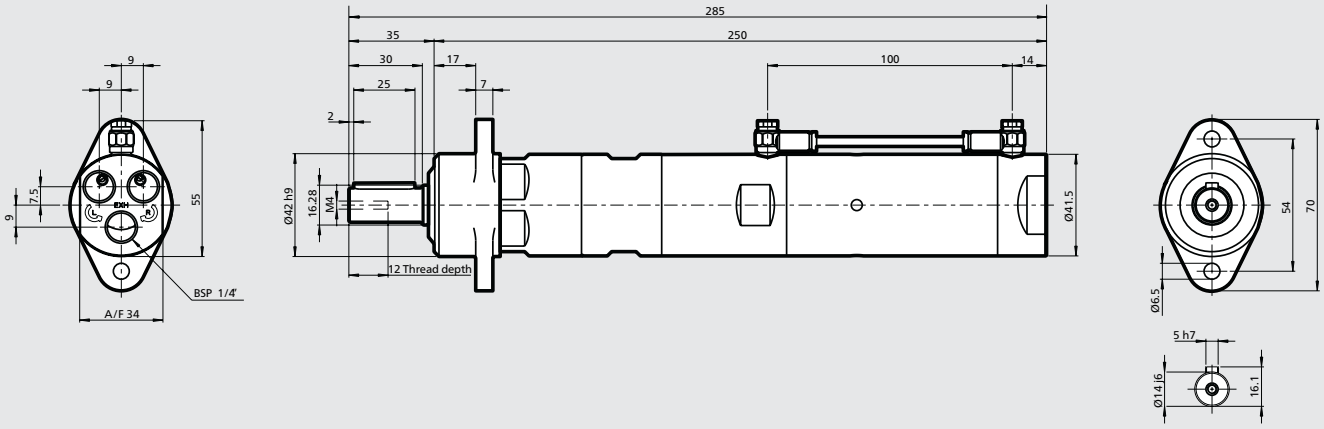

Reversible with brake

LZB33-LB-AR0015
LZB33-LB-AR0011
LZB33-LB-AR0008
LZB33-LB-AR0006

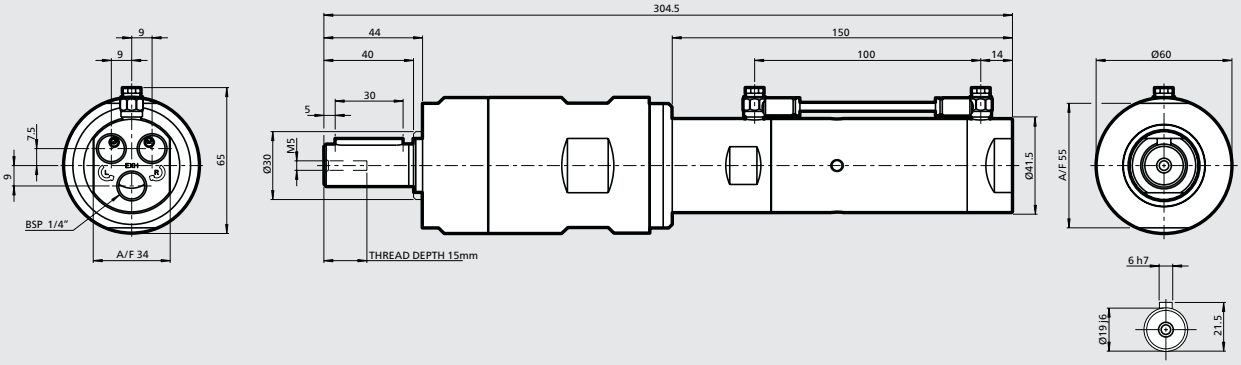

Optional mounting

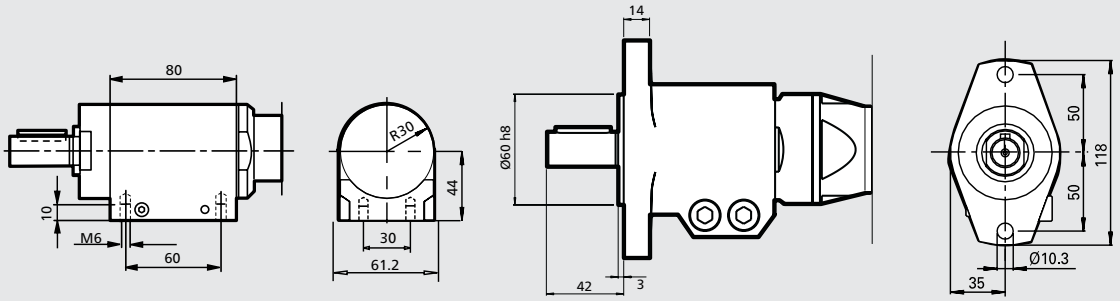

Foot
Ordering No. 4430 0178 80

Flange
Ordering No. 4430 0569 84

Reversible with brake

LZB33-LB-AR0004
LZB33-LB-AR0003
LZB33-LB-AR0002
LZB33-LB-AR0001

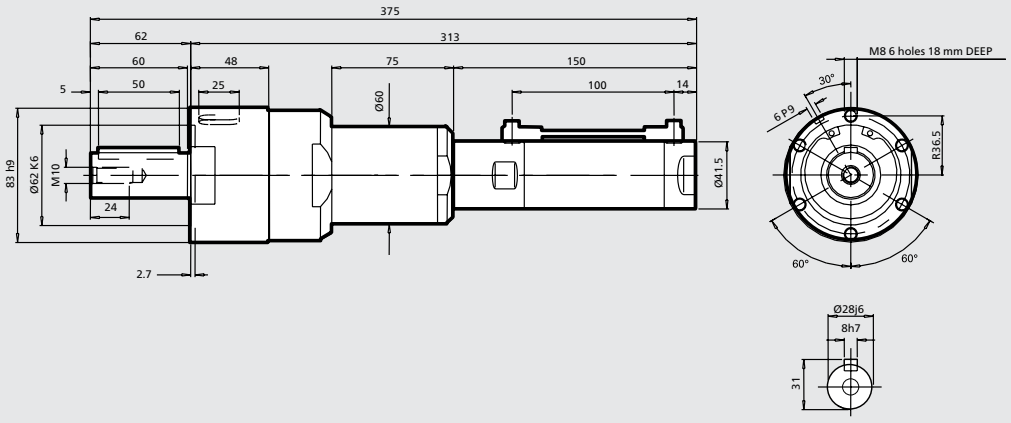

Vane motors **LZB42-L**

Lubrication free

0.50 – 0.71 kW
0.67 – 0.95 hp



EX certification valid for fixture mounted use only with a maximum surrounding temperature of +40°C (104°F).

For optional vanes and accessories see chapter Accessories.

Data at air pressure 6.3 bar (91 psi)

Model Lubricated	Max output kW	Max output hp	Speed at max output r/min	Torque at max output Nm	Torque at max output lb-ft	Min starting torque Nm	Min starting torque lb-ft	Stall torque Nm	Stall torque lb-ft	Free speed r/min	Air consumption at max output l/s	Air consumption at max output cfm	Weight kg	Weight lb	Shaft loading code [1]	ATEX code	Ordering No.
Clockwise rotation (Keyed shaft)																	
LZB42-L-A200-11	0.71	0.95	10000	0.68	0.5	1.09	0.8	1.4	1.0	19000	13.0	28.0	1.2	2.65	e	Ex II 2GD h T4 IIC T110°C	8411 0420 08
LZB42-L-A065-11	0.71	0.95	3100	2.2	1.6	3.5	2.6	4.4	3.2	6100	13.0	28.0	1.2	2.65	e	Ex II 2GD h T4 IIC T110°C	8411 0420 16
LZB42-L-A040-11	0.71	0.95	1960	3.5	2.6	5.6	4.1	7.0	5.2	3800	13.0	28.0	1.2	2.65	e	Ex II 2GD h T4 IIC T110°C	8411 0420 24
LZB42-L-A025-11	0.71	0.95	1180	5.8	4.3	9.3	6.9	11.6	8.6	2200	13.0	28.0	1.2	2.65	e	Ex II 2GD h T4 IIC T110°C	8411 0420 32
LZB42-L-A015-11	0.70	0.94	690	9.7	7.2	15.5	11.4	19.4	14.3	1300	13.0	28.0	1.25	2.75	e	Ex II 2GD h T6 IIC T85°C	8411 0420 40
LZB42-L-A010-11	0.70	0.94	440	15.1	11.1	24	18	30	22	850	13.0	28.0	1.25	2.75	e	Ex II 2GD h T6 IIC T85°C	8411 0420 57
LZB42-L-A005-11	0.70	0.94	260	25	18.4	40	30	50	37	500	13.0	28.0	1.25	2.75	e	Ex II 2GD h T6 IIC T85°C	8411 0420 65
LZB42-L-A0030-11	0.68	0.91	150	44	32	70	52	88	65	270	13.0	28.0	2.7	5.8	g	Ex II 2GD h T6 IIC T85°C	8411 0420 73
LZB42-L-A0020-11	0.68	0.91	95	69	51	110	81	138	102	180	13.0	28.0	2.7	5.8	g	Ex II 2GD h T6 IIC T85°C	8411 0420 81
LZB42-L-A0012-11	0.68	0.91	55	114	84	182	134	228	168	105	13.0	28.0	2.7	5.8	g	Ex II 2GD h T6 IIC T85°C	8411 0420 99
LZB42-L-A0008-11	0.66	0.89	37	173	128	277	204	346	255	70	13.0	28.0	4.9	10.7	h	Ex II 2GD h T6 IIC T85°C	8411 0421 07
LZB42-L-A0005-11	0.66	0.89	23	272	201	435	321	544	401	42	13.0	28.0	4.9	10.7	h	Ex II 2GD h T6 IIC T85°C	8411 0421 15
Reversible (Keyed shaft)																	
LZB42-L-AR170-11	0.53	0.71	8000	0.63	0.46	0.85	0.63	1.3	1.0	14200	12.5	27.0	1.2	2.65	e	Ex II 2GD h T4 IIC T110°C	8411 0423 05
LZB42-L-AR050-11	0.53	0.71	2500	2.0	1.5	2.7	2.0	4.0	3.0	4500	12.5	27.0	1.2	2.65	e	Ex II 2GD h T4 IIC T110°C	8411 0423 13
LZB42-L2-AR030-11	0.53	0.71	1570	3.2	2.4	4.3	3.2	6.4	4.7	2800	12.5	27.0	1.2	2.65	e	Ex II 2GD h T4 IIC T110°C	8411 0423 21
LZB42-L-AR020-11	0.53	0.71	940	5.4	4.0	7.3	5.4	10.8	8.0	1700	12.5	27.0	1.2	2.65	e	Ex II 2GD h T4 IIC T110°C	8411 0423 39
LZB42-L-AR010-11	0.52	0.70	550	9.0	6.6	12.2	9.0	18	13.3	980	12.5	27.0	1.25	2.75	e	Ex II 2GD h T6 IIC T85°C	8411 0423 47
LZB42-L-AR007-11	0.52	0.70	350	14	10.3	18.9	13.9	28	21	640	12.5	27.0	1.25	2.75	e	Ex II 2GD h T6 IIC T85°C	8411 0423 54
LZB42-L-AR004-11	0.52	0.70	210	23	17	31	23	46	34	375	12.5	27.0	1.25	2.75	e	Ex II 2GD h T6 IIC T85°C	8411 0423 62
LZB42-L-AR0025-11	0.51	0.68	120	41	30	55	41	82	60	210	12.5	27.0	2.7	5.8	g	Ex II 2GD h T6 IIC T85°C	8411 0423 70
LZB42-L-AR0015-11	0.51	0.68	75	64	47	86	63	128	94	140	12.5	27.0	2.7	5.8	g	Ex II 2GD h T6 IIC T85°C	8411 0423 88
LZB42-L-AR0010-11	0.51	0.68	46	106	78	143	105	212	156	80	12.5	27.0	2.7	5.8	g	Ex II 2GD h T6 IIC T85°C	8411 0423 96
LZB42-L-AR0006-11	0.50	0.67	29	162	119	219	162	324	239	50	12.5	27.0	4.9	10.7	h	Ex II 2GD h T6 IIC T85°C	8411 0424 04
LZB42-L-AR0004-11	0.50	0.67	19	255	188	344	254	510	376	33	12.5	27.0	4.9	10.7	h	Ex II 2GD h T6 IIC T85°C	8411 0424 12

[1] *For Shaft loading curves, see page 14.*

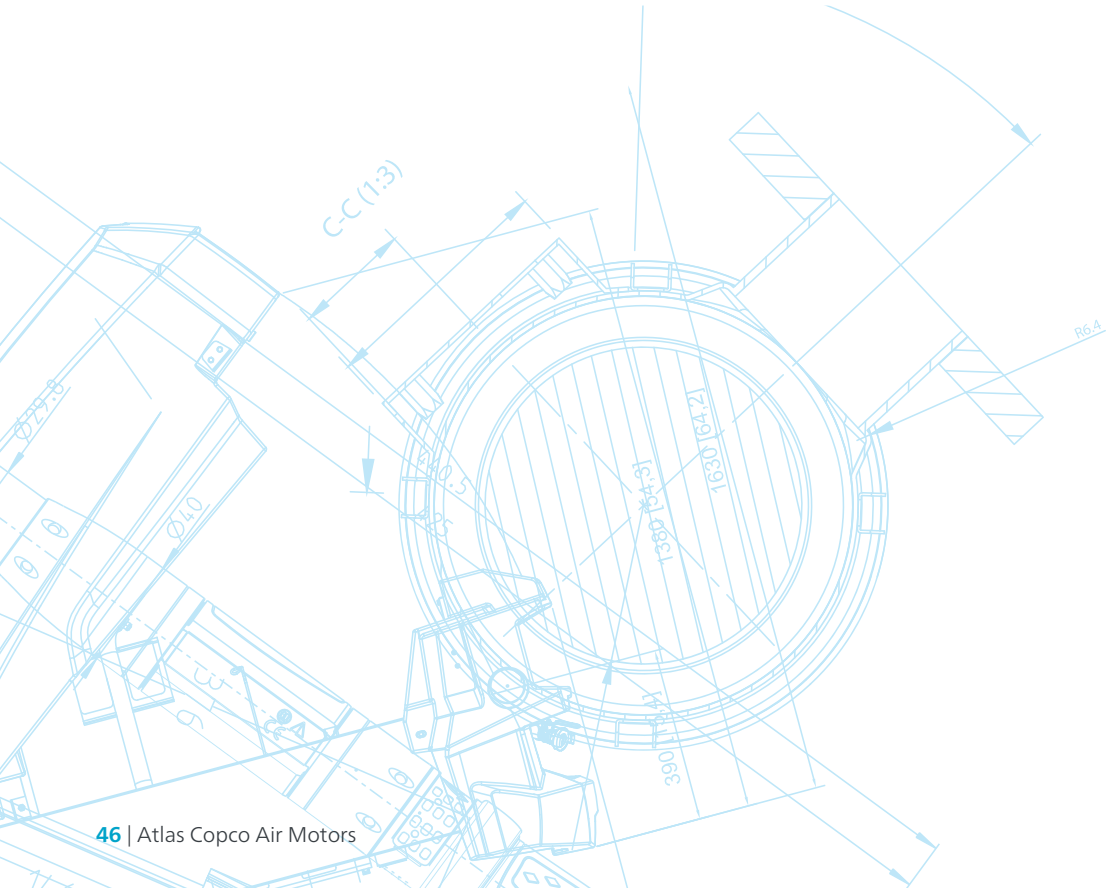

Dimensions (mm)

Conversion factor 1 mm = 0.04 inch

All versions

Clockwise

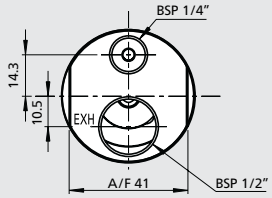

Reversible

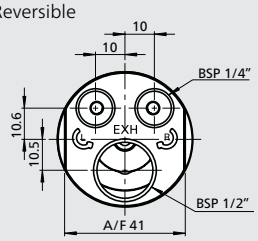

Clockwise	Reversible
LZB42-L-A200	LZB42-L-AR170
LZB42-L-A065	LZB42-L-AR050
LZB42-L-A040	LZB42-L-AR030
LZB42-L-A025	LZB42-L-AR020
LZB42-L-A015	LZB42-L-AR010
LZB42-L-A010	LZB42-L-AR007
LZB42-L-A005	LZB42-L-AR004

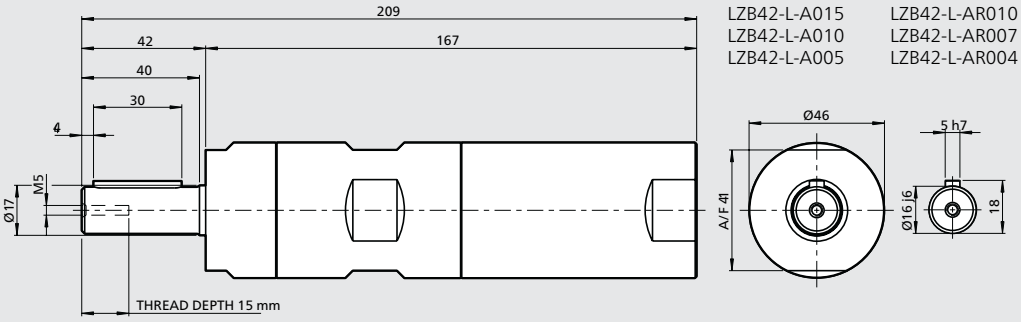

Optional mountings

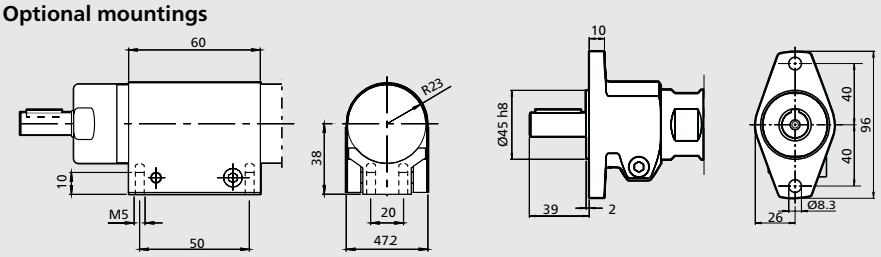

Foot Ordering No. 4430 0575 80

Flange Ordering No. 4430 0490 81

Clockwise
LZB42-L-A0030
LZB42-L-A0020
LZB42-L-A0012

Reversible
LZB42-L-AR0025
LZB42-L-AR0015
LZB42-L-AR0010

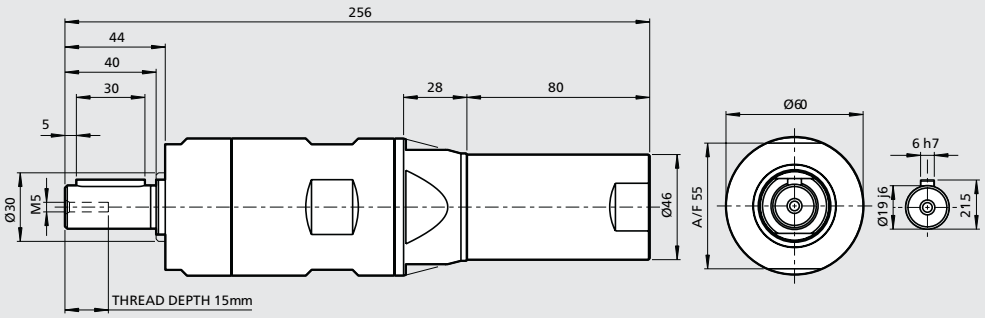

Optional mountings

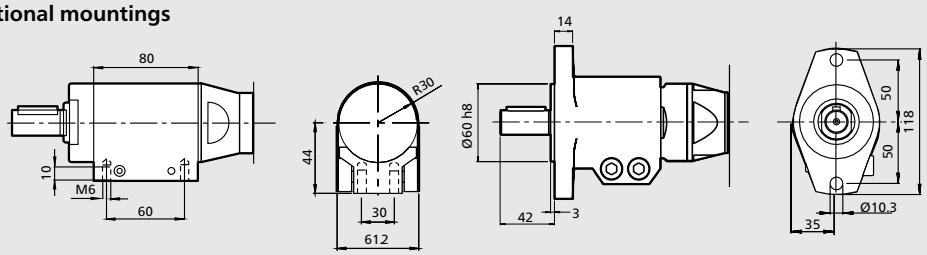

Foot Ordering No. 4430 0178 80

Flange Ordering No. 4430 0569 84

Clockwise
LZB42-L-A0008
LZB42-L-A0005

Reversible
LZB42-L-AR0006
LZB42-L-AR0004

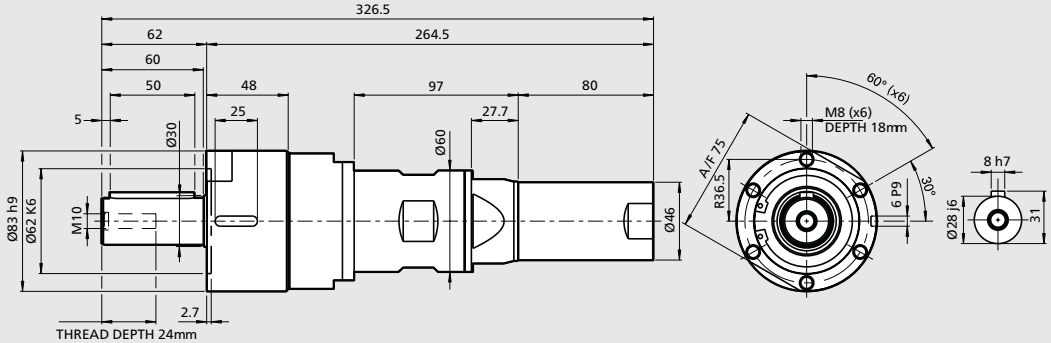

LZB42-L: Performance curves at air pressure 6.3 bar (91 psi)

Non-reversible (A)

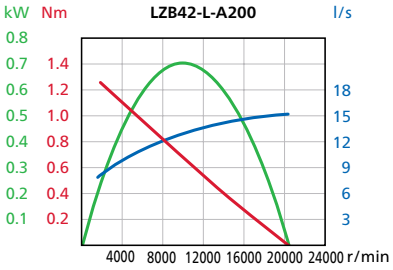

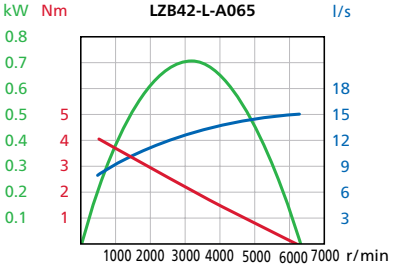

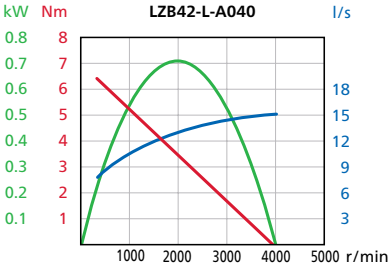

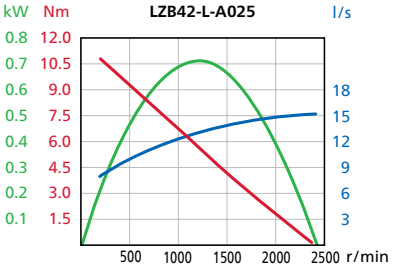

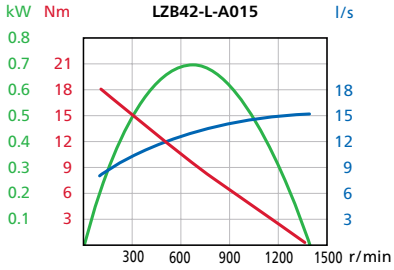

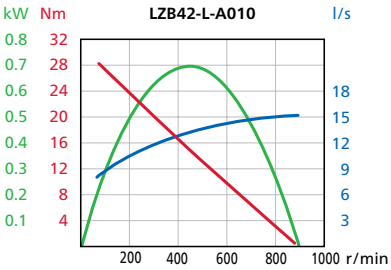

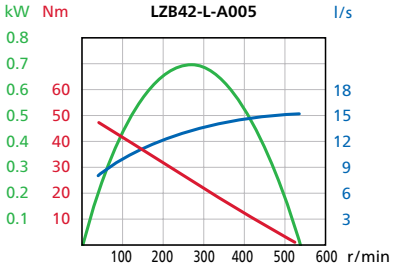

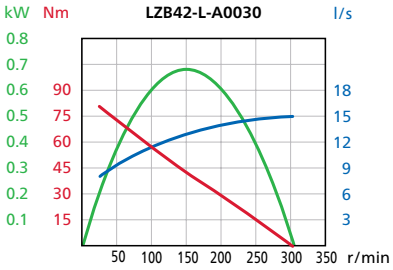

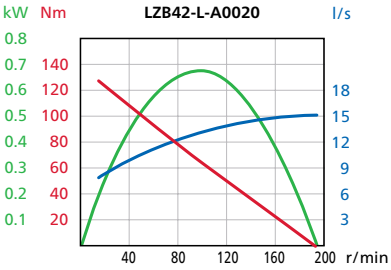

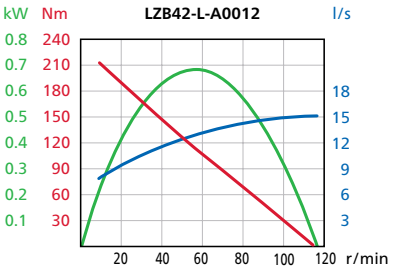

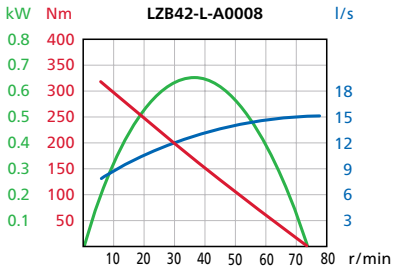

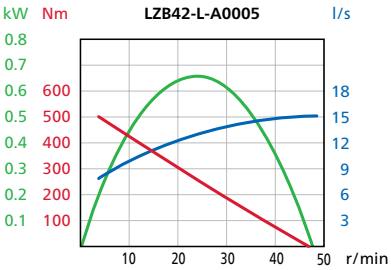

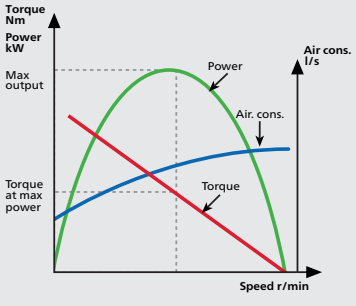

Conversion factors

1 kW	= 1.34 hp
1 Nm	= 0.74 lbf - ft
1 l/s	= 2.1 cfm
1 hp	= 0.75 kW
1 lbf-ft	= 1.36 Nm
1 cfm	= 0.47 l/s

For information about performance curves, see page 6.

LZB42-L: Performance curves at air pressure 6.3 bar (91 psi)

Reversible (AR)

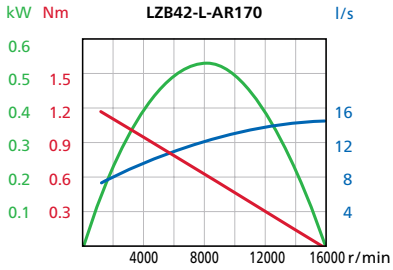

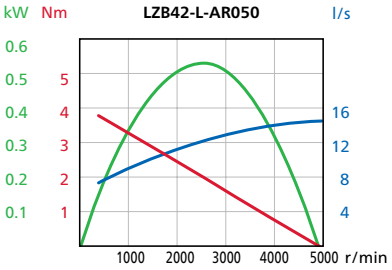

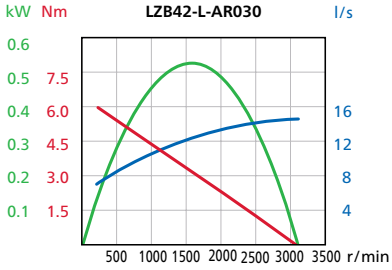

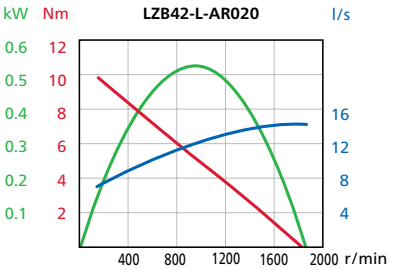

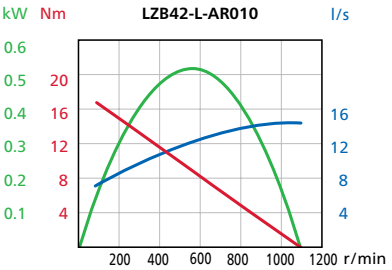

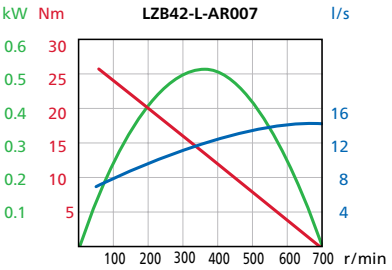

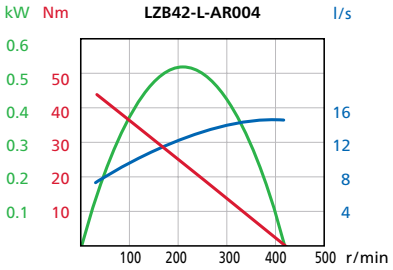

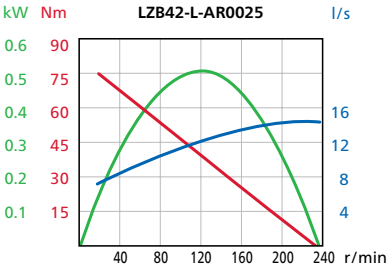

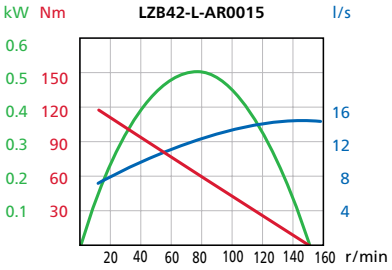

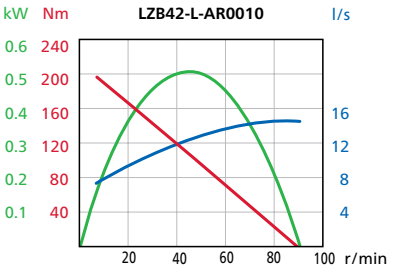

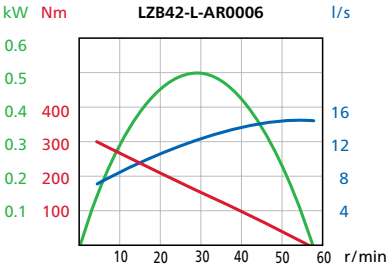

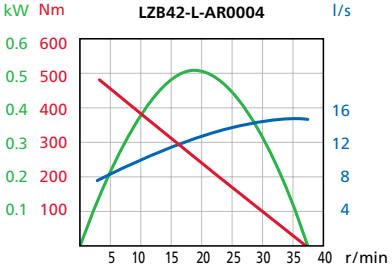

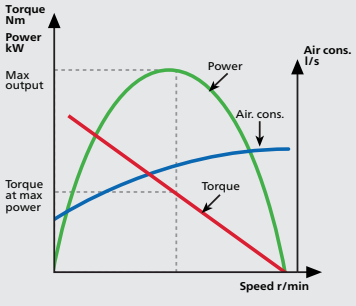

Conversion factors

1 kW	= 1.34 hp
1 Nm	= 0.74 lbf - ft
1 l/s	= 2.1 cfm
1 hp	= 0.75 kW
1 lbf-ft	= 1.36 Nm
1 cfm	= 0.47 l/s

For information about performance curves, see page 6.

Vane motors **LZB46-L**

Lubrication free

0.59 – 0.84 kW
0.79 – 1.13 hp



EX certification valid for fixture mounted use only with a maximum surrounding temperature of +40°C (104°F).

For optional vanes and accessories see chapter Accessories.

Data at air pressure 6.3 bar (91 psi)

Model Lubricated	Max output kW	Max output hp	Speed at max output r/min	Torque at max output Nm	Torque at max output lb-ft	Min starting torque Nm	Min starting torque lb-ft	Stall torque Nm	Stall torque lb-ft	Free speed r/min	Air consumption at max output l/s	Air consumption at max output cfm	Weight kg	Weight lb	Shaft loading code [1]	ATEX code	Ordering No.
Clockwise rotation (Keyed shaft)																	
LZB46-L-A200-11	0.84	1.13	10800	0.74	0.55	1.2	0.89	1.48	1.09	20000	16.2	34.4	1.2	2.65	e	Ex II 2GD h T4 IIC T110°C	8411 0460 09
LZB46-L-A065-11	0.84	1.13	3300	2.4	1.8	3.9	2.9	4.8	3.5	6300	16.2	34.4	1.2	2.65	e	Ex II 2GD h T4 IIC T110°C	8411 0460 17
LZB46-L-A040-11	0.84	1.13	2100	3.8	2.8	6.1	4.5	7.6	5.6	4000	16.2	34.4	1.2	2.65	e	Ex II 2GD h T4 IIC T110°C	8411 0460 25
LZB46-L-A025-11	0.84	1.13	1270	6.3	4.6	10	7.4	12.6	9.3	2400	16.2	34.4	1.2	2.65	e	Ex II 2GD h T4 IIC T110°C	8411 0460 33
LZB46-L-A015-11	0.82	1.10	740	10.5	7.7	17	12.5	21	15.5	1400	16.2	34.4	1.3	2.9	e	Ex II 2GD h T6 IIC T85°C	8411 0460 41
LZB46-L-A010-11	0.82	1.10	480	16.5	12.2	26	19.2	33	24.3	900	16.2	34.4	1.3	2.9	e	Ex II 2GD h T6 IIC T85°C	8411 0460 58
LZB46-L-A005-11	0.82	1.10	280	27	20	44	32	55	41	540	16.2	34.4	1.3	2.9	e	Ex II 2GD h T6 IIC T85°C	8411 0460 66
LZB46-L-A0030-11	0.81	1.09	160	48	35	77	57	95	70	300	16.2	34.4	2.7	6.0	g	Ex II 2GD h T6 IIC T85°C	8411 0460 74
LZB46-L-A0020-11	0.81	1.09	105	75	55	121	89	149	110	200	16.2	34.4	2.7	6.0	g	Ex II 2GD h T6 IIC T85°C	8411 0460 82
LZB46-L-A0012-11	0.81	1.09	62	124	91	201	148	248	183	115	16.2	34.4	2.7	6.0	g	Ex II 2GD h T6 IIC T85°C	8411 0460 90
LZB46-L-A0008-11	0.79	1.06	39	191	141	309	228	382	282	70	16.2	34.4	4.9	10.8	h	Ex II 2GD h T6 IIC T85°C	8411 0461 08
LZB46-L-A0005-11	0.79	1.06	25	299	221	485	358	598	441	45	16.2	34.4	4.9	10.8	h	Ex II 2GD h T6 IIC T85°C	8411 0461 16
Clockwise rotation (Threaded shaft)																	
LZB46-L-A200-12	0.84	1.13	10800	0.74	0.55	1.2	0.89	1.48	1.09	20000	16.2	34.4	1.2	2.65	e	Ex II 2GD h T4 IIC T110°C	8411 0469 00
LZB46-L-A065-12	0.84	1.13	3300	2.4	1.8	3.9	2.9	4.8	3.5	6300	16.2	34.4	1.2	2.65	e	Ex II 2GD h T4 IIC T110°C	8411 0469 18
LZB46-L-A040-12	0.84	1.13	2100	3.8	2.8	6.1	4.5	7.6	5.6	4000	16.2	34.4	1.2	2.65	e	Ex II 2GD h T4 IIC T110°C	8411 0469 26
LZB46-L-A025-12	0.84	1.13	1270	6.3	4.6	10	7.4	12.6	9.3	2400	16.2	34.4	1.2	2.65	e	Ex II 2GD h T4 IIC T110°C	8411 0469 34
LZB46-L-A015-12	0.82	1.10	740	10.5	7.7	17	12.5	21	15.5	1400	16.2	34.4	1.3	2.9	e	Ex II 2GD h T6 IIC T85°C	8411 0469 42
LZB46-L-A010-12	0.82	1.10	480	16.5	12.2	26	19.2	33	24.3	900	16.2	34.4	1.3	2.9	e	Ex II 2GD h T6 IIC T85°C	8411 0469 59
LZB46-L-A005-12	0.82	1.10	280	27	20	44	32	55	41	540	16.2	34.4	1.3	2.9	e	Ex II 2GD h T6 IIC T85°C	8411 0469 67
LZB46-L-A0030-12	0.81	1.09	160	48	35	77	57	95	70	300	16.2	34.4	2.7	6.0	g	Ex II 2GD h T6 IIC T85°C	8411 0469 75
LZB46-L-A0020-12	0.81	1.09	105	75	55	121	89	149	110	200	16.2	34.4	2.7	6.0	g	Ex II 2GD h T6 IIC T85°C	8411 0469 83
LZB46-L-A0012-12	0.81	1.09	62	124	91	201	148	248	183	115	16.2	34.4	2.7	6.0	g	Ex II 2GD h T6 IIC T85°C	8411 0469 91
Anti-clockwise rotation (Keyed shaft)																	
LZB46-L-AV200-11	0.84	1.13	10800	0.74	0.55	1.2	0.89	1.48	1.1	20000	16.2	34.4	1.2	2.65	e	Ex II 2GD h T4 IIC T110°C	8411 0465 04
LZB46-L-AV065-11	0.84	1.13	3300	2.4	1.8	3.9	2.9	4.8	3.5	6300	16.2	34.4	1.2	2.65	e	Ex II 2GD h T4 IIC T110°C	8411 0465 12
LZB46-L-AV040-11	0.84	1.13	2100	3.8	2.8	6.1	4.5	7.6	5.6	4000	16.2	34.4	1.2	2.65	e	Ex II 2GD h T4 IIC T110°C	8411 0465 20
LZB46-L-AV025-11	0.84	1.13	1270	6.3	4.6	10	7.4	12.6	9.3	2400	16.2	34.4	1.2	2.65	e	Ex II 2GD h T4 IIC T110°C	8411 0465 38
LZB46-L-AV015-11	0.82	1.10	740	10.5	7.7	17	12.5	21	15.5	1400	16.2	34.4	1.3	2.9	e	Ex II 2GD h T6 IIC T85°C	8411 0465 46
LZB46-L-AV010-11	0.82	1.10	480	16.5	12.2	26	19.2	33	24.3	900	16.2	34.4	1.3	2.9	e	Ex II 2GD h T6 IIC T85°C	8411 0465 53
LZB46-L-AV005-11	0.82	1.10	280	27	20	44	32	55	41	540	16.2	34.4	1.3	2.9	e	Ex II 2GD h T6 IIC T85°C	8411 0465 61
LZB46-L-AV0030-11	0.81	1.09	160	48	35	77	57	95	70	300	16.2	34.4	2.7	6.0	g	Ex II 2GD h T6 IIC T85°C	8411 0465 79
LZB46-L-AV0020-11	0.81	1.09	105	75	55	121	89	149	110	200	16.2	34.4	2.7	6.0	g	Ex II 2GD h T6 IIC T85°C	8411 0465 87
LZB46-L-AV0012-11	0.81	1.09	62	124	91	201	148	248	183	115	16.2	34.4	2.7	6.0	g	Ex II 2GD h T6 IIC T85°C	8411 0465 95
LZB46-L-AV0008-11	0.79	1.06	39	191	141	309	228	382	282	70	16.2	34.4	4.9	10.8	h	Ex II 2GD h T6 IIC T85°C	8411 0466 03
LZB46-L-AV0005-11	0.79	1.06	25	299	221	485	358	598	441	45	16.2	34.4	4.9	10.8	h	Ex II 2GD h T6 IIC T85°C	8411 0466 11
Reversible (Keyed shaft)																	
LZB46-L-AR170-11	0.63	0.84	8500	0.71	0.52	0.96	0.71	1.42	1.0	15800	14.0	29.7	1.2	2.65	e	Ex II 2GD h T4 IIC T110°C	8411 0463 06
LZB46-L-AR050-11	0.63	0.84	2600	2.3	1.7	3.1	2.3	4.6	3.4	5000	14.0	29.7	1.2	2.65	e	Ex II 2GD h T4 IIC T110°C	8411 0463 14
LZB46-L-AR030-11	0.63	0.84	1670	3.6	2.7	4.9	3.6	7.2	5.3	3200	14.0	29.7	1.2	2.65	e	Ex II 2GD h T4 IIC T110°C	8411 0463 22
LZB46-L-AR020-11	0.63	0.84	1000	6.0	4.4	8.1	6.0	12	8.9	1900	14.0	29.7	1.2	2.65	e	Ex II 2GD h T4 IIC T110°C	8411 0463 30
LZB46-L-AR010-11	0.62	0.83	590	10.1	7.4	13.5	10	20	14.9	1100	14.0	29.7	1.3	2.9	e	Ex II 2GD h T6 IIC T85°C	8411 0463 48
LZB46-L-AR007-11	0.62	0.83	370	15.8	11.7	21	15.5	32	23.3	700	14.0	29.7	1.3	2.9	e	Ex II 2GD h T6 IIC T85°C	8411 0463 55
LZB46-L-AR004-11	0.62	0.83	220	26	19.5	35	26	53	39	420	14.0	29.7	1.3	2.9	e	Ex II 2GD h T6 IIC T85°C	8411 0463 63
LZB46-L-AR0025-11	0.60	0.80	125	46	34	61	45	91	67	230	14.0	29.7	2.7	6.0	g	Ex II 2GD h T6 IIC T85°C	8411 0463 71
LZB46-L-AR0015-11	0.60	0.80	80	72	53	96	71	143	105	150	14.0	29.7	2.7	6.0	g	Ex II 2GD h T6 IIC T85°C	8411 0463 89
LZB46-L-AR0010-11	0.60	0.80	49	119	88	161	119	238	175	90	14.0	29.7	2.7	6.0	g	Ex II 2GD h T6 IIC T85°C	8411 0463 97
LZB46-L-AR0006-11	0.59	0.79	31	183	135	247	182	366	270	55	14.0	29.7	4.9	10.8	h	Ex II 2GD h T6 IIC T85°C	8411 0464 05
LZB46-L-AR0004-11	0.59	0.79	20	287	212	388	286	574	423	35	14.0	29.7	4.9	10.8	h	Ex II 2GD h T6 IIC T85°C	8411 0464 13

[1] *For Shaft loading curves, see page 14.*

Clockwise/ Anti-clockwise
LZB46-L-A200
LZB46-L-A065
LZB46-L-A040
LZB46-L-A025
LZB46-L-A015
LZB46-L-A010
LZB46-L-A005
LZB46-L-AV200
LZB46-L-AV065
LZB46-L-AV040
LZB46-L-AV025
LZB46-L-AV015
LZB46-L-AV010
LZB46-L-AV005

Reversible
LZB46-L-AR170
LZB46-L-AR050
LZB46-L-AR030
LZB46-L-AR020
LZB46-L-AR010
LZB46-L-AR007
LZB46-L-AR004

Keyed shaft (-11)

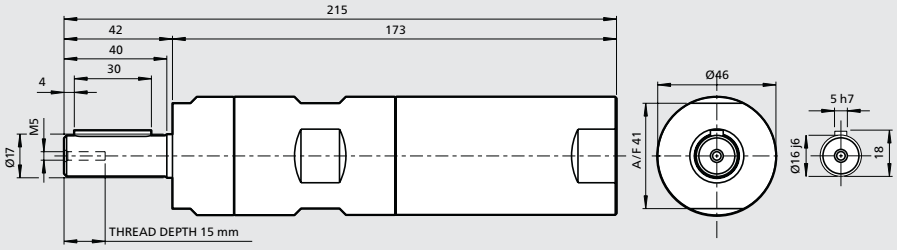

Optional mountings

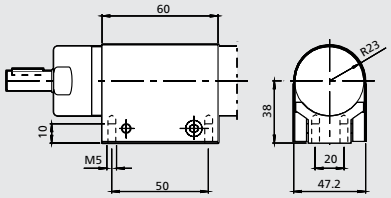

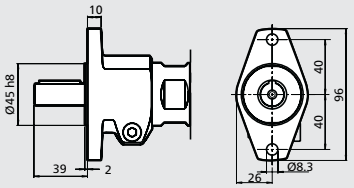

Threaded shaft (-12)

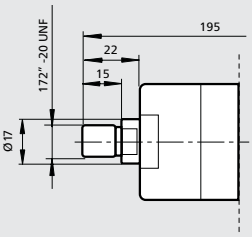

Foot Ordering No. 4430 0575 80

Flange Ordering No. 4430 0490 81

All versions

Clockwise/
Anti-clockwise

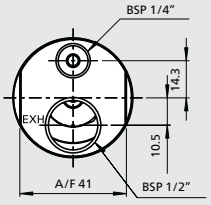

Reversible

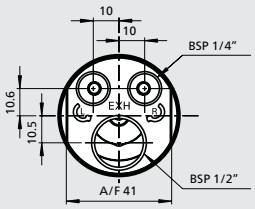

Clockwise/ Anti-clockwise
LZB46-L-A0030
LZB46-L-A0020
LZB46-L-A0012
LZB46-L-AV0030
LZB46-L-AV0020
LZB46-L-AV0012

Reversible
LZB46-L-AR0025
LZB46-L-AR0015
LZB46-L-AR0010

Keyed shaft (-11)

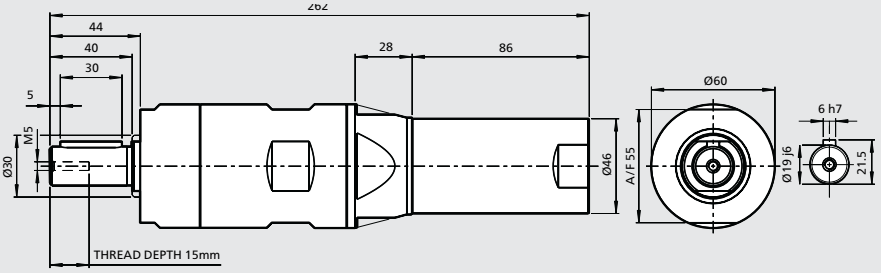

Optional mountings

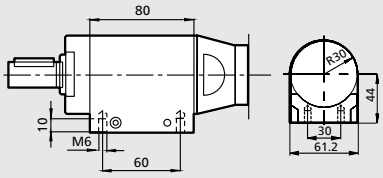

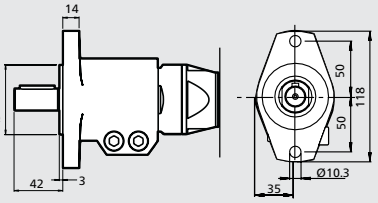

Threaded shaft (-12)

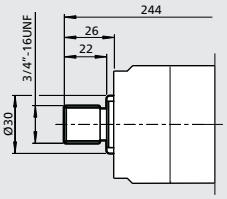

Foot Ordering No. 4430 0178 80

Flange Ordering No. 4430 0569 84

Clockwise/ Anti-clockwise
LZB46-L-A0008
LZB46-L-A0005
LZB46-L-AV0008
LZB46-L-AV0005

Reversible
LZB46-L-AR0006
LZB46-L-AR0004

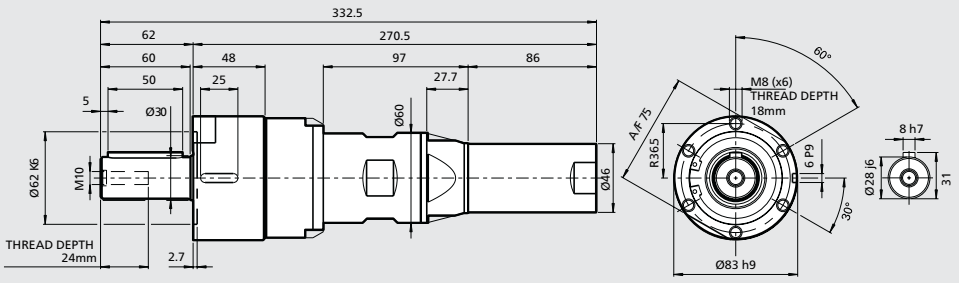

Vane motors **LZB46-RL**

Stainless steel and lubrication free

0.60 – 0.84 kW
0.80 – 1.13 hp

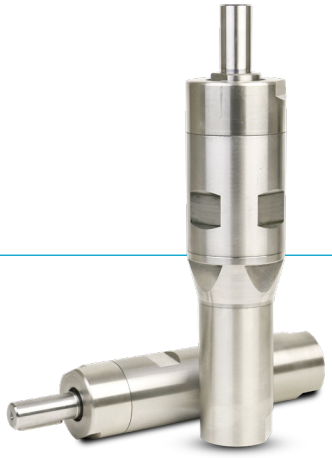

Material in parts:

- Casing and front part stainless steel: ISO 683/XIII Type 17, SS 14 2346, DIN 17440 X12CrNiS188
- Outgoing shaft and gear rim stainless steel: ISO 683/XIII Type 9b,SS 14 2321, DIN 17440 X22CrNi17
- 100% Silicon free
- Grease that conforms to Food Grade regulations

EX certification valid for fixture mounted use only with a maximum surrounding temperature of +40°C (104°F).

For optional stainless steel motor cell, vane kits and other accessories see chapter Accessories

Data at air pressure 6.3 bar (91 psi)

Model Lubrication free	Max output kW	 hp	Speed at max output r/min	Torque at max output Nm	 lb-ft	Min starting torque Nm	 lb-ft	Stall torque Nm	 lb-ft	Free speed r/min	Air consumption at max output l/s	 cfm	Weight kg	 lb	Shaft loading code [1]	ATEX code	Ordering No.
Clockwise rotation (Keyed shaft)																	
LZB46-RL-A200-11	0.84	1.13	10800	0.74	0.55	1.2	0.89	1.48	1.09	20000	16.2	34.4	1.8	4.0	e	Ex II 2GD h T4 IIC T110°C	8411 0472 15
LZB46-RL-A065-11	0.84	1.13	3300	2.4	1.8	3.9	2.9	4.8	3.5	6300	16.2	34.4	1.8	4.0	e	Ex II 2GD h T4 IIC T110°C	8411 0472 23
LZB46-RL-A040-11	0.84	1.13	2100	3.8	2.8	6.1	4.5	7.6	5.6	4000	16.2	34.4	1.8	4.0	e	Ex II 2GD h T4 IIC T110°C	8411 0472 31
LZB46-RL-A025-11	0.84	1.13	1270	6.3	4.6	10	7.4	12.6	9.3	2400	16.2	34.4	1.8	4.0	e	Ex II 2GD h T4 IIC T110°C	8411 0472 49
LZB46-RL-A015-11	0.82	1.10	740	10.5	7.7	17	12.5	21	15.5	1400	16.2	34.4	1.9	4.2	e	Ex II 2GD h T4 IIC T110°C	8411 0470 82
LZB46-RL-A010-11	0.82	1.10	480	16.5	12.2	26	19.2	33	24.3	900	16.2	34.4	1.9	4.2	e	Ex II 2GD h T4 IIC T110°C	8411 0471 08
LZB46-RL-A005-11	0.82	1.10	280	27	20	44	32	55	41	540	16.2	34.4	1.9	4.2	e	Ex II 2GD h T4 IIC T110°C	8411 0471 16
LZB46-RL-A0030-11	0.81	1.09	160	48	35	77	57	95	70	300	16.2	34.4	3.8	8.4	g	Ex II 2GD h T6 IIC T85°C	8411 0471 24
LZB46-RL-A0020-11	0.81	1.09	105	75	55	121	89	149	110	200	16.2	34.4	3.8	8.4	g	Ex II 2GD h T6 IIC T85°C	8411 0471 32
LZB46-RL-A0012-11	0.81	1.09	62	124	91	201	148	248	183	115	16.2	34.4	3.8	8.4	g	Ex II 2GD h T6 IIC T85°C	8411 0471 40
Reversible (Keyed shaft)																	
LZB46-RL-AR170-11	0.63	0.84	8500	0.71	0.52	0.96	0.71	1.42	1.0	15800	14.0	29.7	1.8	4.0	e	Ex II 2GD h T4 IIC T110°C	8411 0472 56
LZB46-RL-AR050-11	0.63	0.84	2600	2.3	1.7	3.1	2.3	4.6	3.4	5000	14.0	29.7	1.8	4.0	e	Ex II 2GD h T4 IIC T110°C	8411 0472 64
LZB46-RL-AR030-11	0.63	0.84	1670	3.6	2.7	4.9	3.6	7.2	5.3	3200	14.0	29.7	1.8	4.0	e	Ex II 2GD h T4 IIC T110°C	8411 0472 72
LZB46-RL-AR020-11	0.63	0.84	1000	6.0	4.4	8.1	6.0	12	8.9	1900	14.0	29.7	1.8	4.0	e	Ex II 2GD h T4 IIC T110°C	8411 0472 80
LZB46-RL-AR010-11	0.62	0.83	590	10.1	7.4	13.5	10	20	14.9	1100	14.0	29.7	1.9	4.2	e	Ex II 2GD h T4 IIC T110°C	8411 0471 57
LZB46-RL-AR007-11	0.62	0.83	370	15.8	11.7	21	15.5	32	23.3	700	14.0	29.7	1.9	4.2	e	Ex II 2GD h T4 IIC T110°C	8411 0471 65
LZB46-RL-AR004-11	0.62	0.83	220	26	19.5	35	26	53	39	420	14.0	29.7	1.9	4.2	e	Ex II 2GD h T4 IIC T110°C	8411 0471 73
LZB46-RL-AR0025-11	0.60	0.80	125	46	34	61	45	91	67	230	14.0	29.7	3.8	8.4	g	Ex II 2GD h T6 IIC T85°C	8411 0471 81
LZB46-RL-AR0015-11	0.60	0.80	80	72	53	96	71	143	105	150	14.0	29.7	3.8	8.4	g	Ex II 2GD h T6 IIC T85°C	8411 0471 99
LZB46-RL-AR0010-11	0.60	0.80	49	119	88	161	119	238	175	90	14.0	29.7	3.8	8.4	g	Ex II 2GD h T6 IIC T85°C	8411 0472 07

[1] *For Shaft loading curves, see page 14.*

NOTE: - If running motors with 100% dry air and no lubrication, performance can be reduced with 5-15% at max output.
- To optimize life time for a lubrication free motor, use lubricated air if the application allows it.

Clockwise	Reversible
LZB46-RL-A200	LZB46-RL-AR170
LZB46-RL-A065	LZB46-RL-AR050
LZB46-RL-A040	LZB46-RL-AR030
LZB46-RL-A025	LZB46-RL-AR020
LZB46-RL-A015	LZB46-RL-AR010
LZB46-RL-A010	LZB46-RL-AR007
LZB46-RL-A005	LZB46-RL-AR004

Keyed shaft (-11)

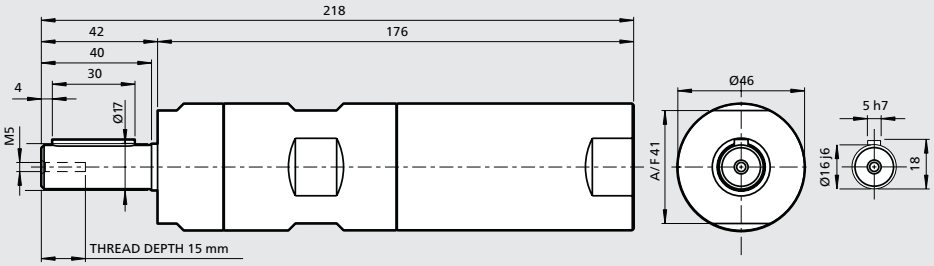

Optional mountings

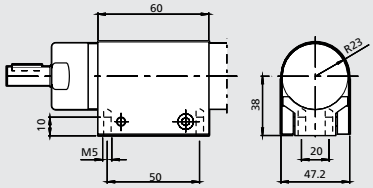

Foot Ordering No. 4430 0575 81

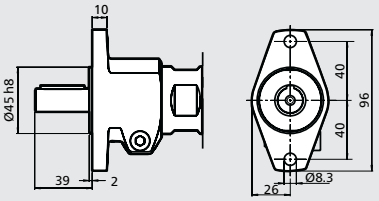

Aluminium
Flange Ordering No. 4430 0490 81

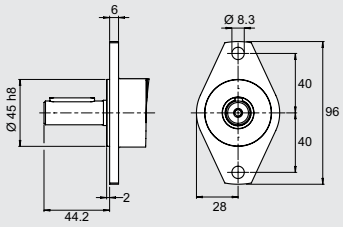

Stainless steel
Flange Ordering No. 4430 1483 80

All versions

Clockwise/
Anti-clockwise

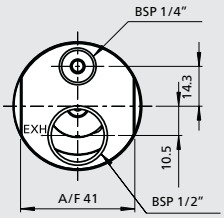

Reversible

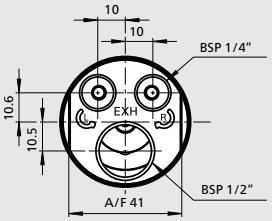

Keyed shaft (-11)

Clockwise	Reversible
LZB46-RL-A0030	LZB46-RL-AR0025
LZB46-RL-A0020	LZB46-RL-AR0015
LZB46-RL-A0012	LZB46-RL-AR0010

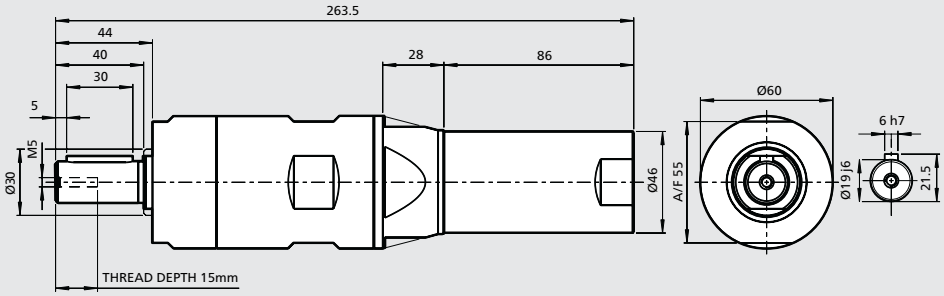

Optional mountings

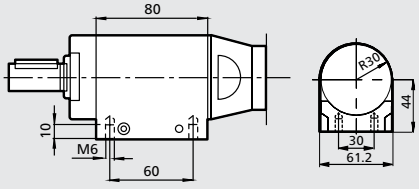

Foot Ordering No. 4430 0178 81

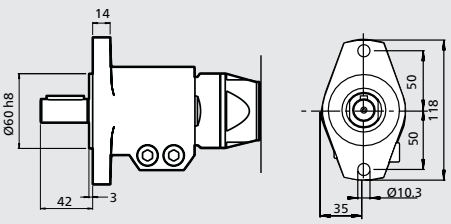

Aluminium
Flange Ordering No. 4430 0569 84

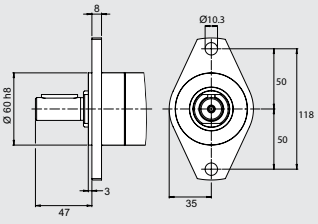

Stainless steel
Flange Ordering No. 4430 2357 80

LZB46-L, LZB46-RL: Performance curves at air pressure 6.3 bar (91 psi)

Non-reversible (A and AV)

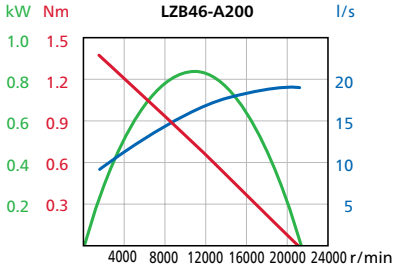

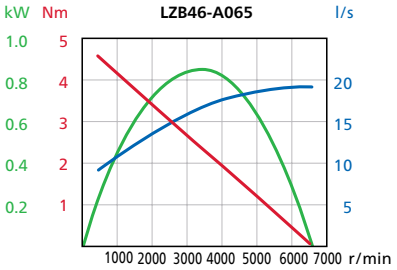

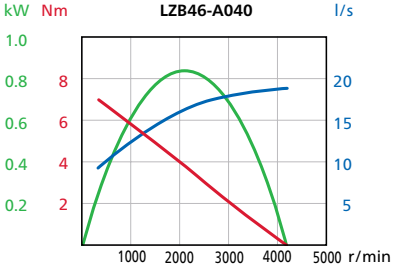

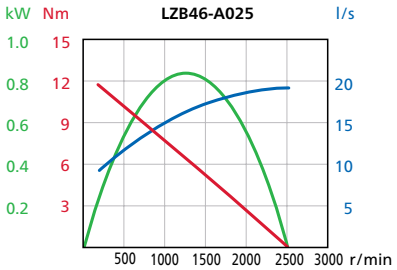

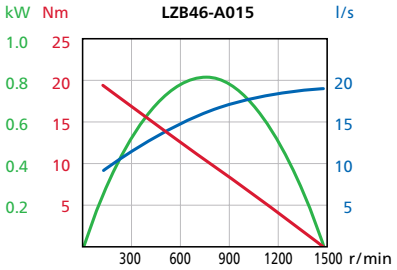

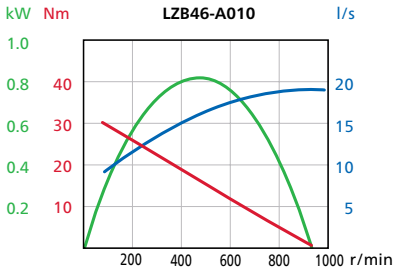

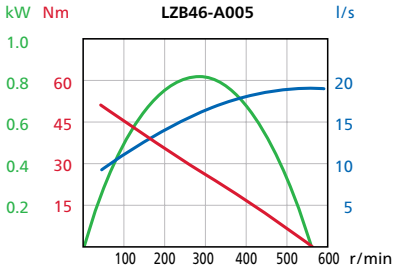

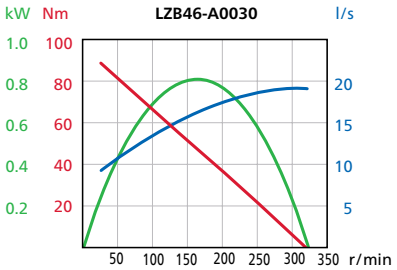

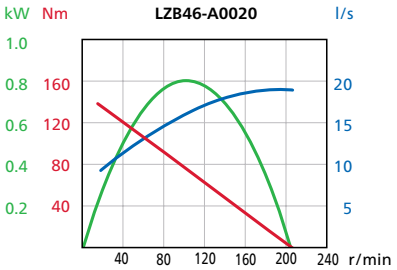

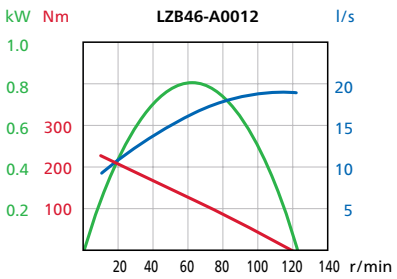

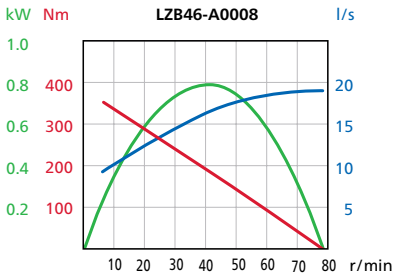

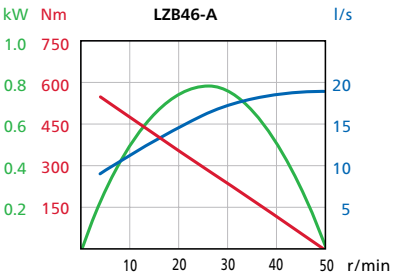

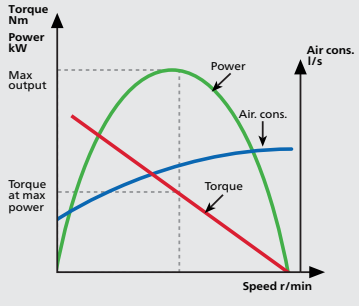

Conversion factors

1 kW	= 1.34 hp
1 Nm	= 0.74 lbf - ft
1 l/s	= 2.1 cfm
1 hp	= 0.75 kW
1 lbf-ft	= 1.36 Nm
1 cfm	= 0.47 l/s

For information about performance curves, see page 6.

LZB46-L, LZB46-RL: Performance curves at air pressure 6.3 bar (91 psi)

Reversible (AR)

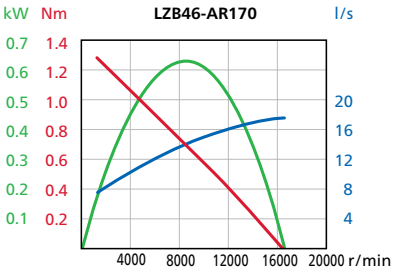

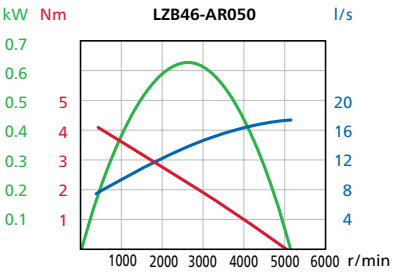

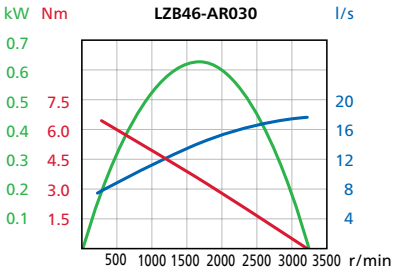

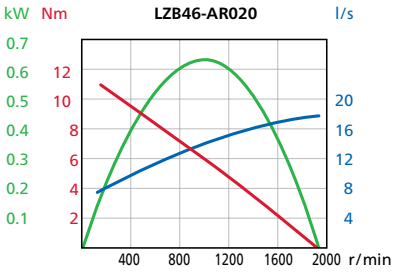

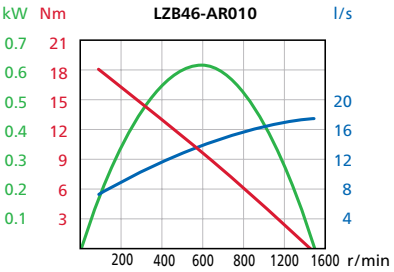

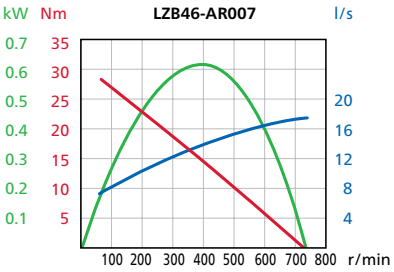

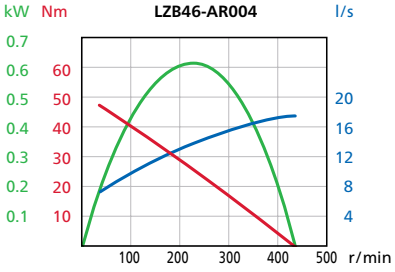

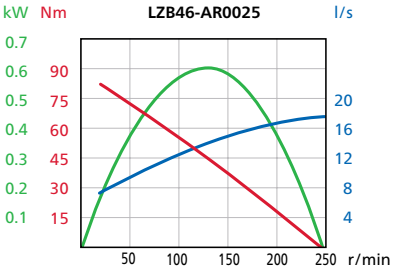

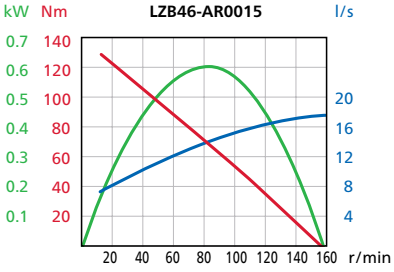

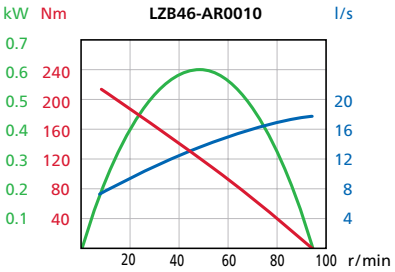

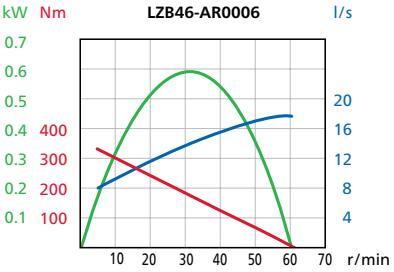

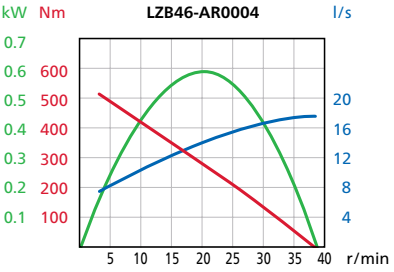

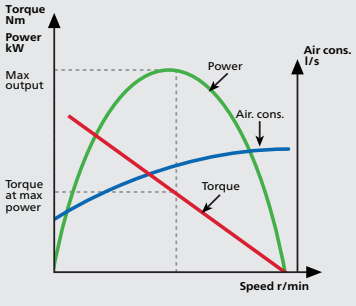

Conversion factors

1 kW	= 1.34 hp
1 Nm	= 0.74 lbf - ft
1 l/s	= 2.1 cfm
1 hp	= 0.75 kW
1 lbf-ft	= 1.36 Nm
1 cfm	= 0.47 l/s

For information about performance curves, see page 6.

Vane motors **LZB54-L**

0.79 – 1.20 kW
1.06 – 1.61 hp



EX certification valid for fixture mounted use only with a maximum surrounding temperature of +40°C (104°F).

For optional vanes and accessories see chapter Accessories.

Data at air pressure 6.3 bar (91 psi)

Model Lubricated	Max output kW	Max output hp	Speed at max output r/min	Torque at max output Nm	Torque at max output lb-ft	Min starting torque Nm	Min starting torque lb-ft	Stall torque Nm	Stall torque lb-ft	Free speed r/min	Air consumption at max output l/s	Air consumption at max output cfm	Weight kg	Weight lb	Shaft loading code [1]	ATEX code	Ordering No.
Clockwise rotation (Keyed shaft)																	
LZB54-L-A180-11	1.20	1.61	10000	1.15	0.85	1.8	1.33	2.3	1.7	17500	22.0	47.0	2.4	5.2	g	Ex II 2GD h T4 IIC T110°C	8411 0560 08
LZB54-L-A050-11	1.20	1.61	2900	4.0	3.0	6.4	4.7	8.0	5.9	5100	22.0	47.0	2.4	5.2	g	Ex II 2GD h T4 IIC T110°C	8411 0560 16
LZB54-L-A030-11	1.20	1.61	1750	6.6	4.9	10.5	7.7	13.2	9.7	3100	22.0	47.0	2.4	5.2	g	Ex II 2GD h T4 IIC T110°C	8411 0560 24
LZB54-L-A020-11	1.20	1.61	1300	8.9	6.6	14	10.3	17.8	13.1	2300	22.0	47.0	2.4	5.2	g	Ex II 2GD h T4 IIC T110°C	8411 0560 32
LZB54-L-A010-11	1.18	1.58	630	18	13.3	29	21	36	27	1050	22.0	47.0	2.5	5.5	g	Ex II 2GD h T6 IIC T85°C	8411 0560 40
LZB54-L-A007-11	1.18	1.58	380	30	22	48	35	60	44	650	22.0	47.0	2.5	5.5	g	Ex II 2GD h T6 IIC T85°C	8411 0560 57
LZB54-L-A005-11	1.18	1.58	280	40	30	65	48	80	59	500	22.0	47.0	2.5	5.5	g	Ex II 2GD h T6 IIC T85°C	8411 0560 65
LZB54-L-A0025-11	1.15	1.54	150	72	53	117	86	144	106	270	22.0	47.0	4.7	10.3	h	Ex II 2GD h T6 IIC T85°C	8411 0560 73
LZB54-L-A0017-11	1.15	1.54	95	119	88	193	142	238	176	160	22.0	47.0	4.7	10.3	h	Ex II 2GD h T6 IIC T85°C	8411 0560 81
LZB54-L-A0012-11	1.15	1.54	70	161	119	261	193	322	237	120	22.0	47.0	4.7	10.3	h	Ex II 2GD h T6 IIC T85°C	8411 0560 99
Anti-clockwise rotation (Keyed shaft)																	
LZB54-L-AV180-11	1.20	1.61	10000	1.15	0.85	1.8	1.33	2.3	1.7	17500	22.0	47.0	2.4	5.2	g	Ex II 2GD h T4 IIC T110°C	8411 0564 04
LZB54-L-AV050-11	1.20	1.61	2900	4.0	3.0	6.4	4.7	8.0	5.9	5100	22.0	47.0	2.4	5.2	g	Ex II 2GD h T4 IIC T110°C	8411 0564 12
LZB54-L-AV030-11	1.20	1.61	1750	6.6	4.9	10.5	7.7	13.2	9.7	3100	22.0	47.0	2.4	5.2	g	Ex II 2GD h T4 IIC T110°C	8411 0564 20
LZB54-L-AV020-11	1.20	1.61	1300	8.9	6.6	14	10.3	17.8	13.1	2300	22.0	47.0	2.4	5.2	g	Ex II 2GD h T4 IIC T110°C	8411 0564 38
LZB54-L-AV010-11	1.18	1.58	630	18	13.3	29	21	36	27	1050	22.0	47.0	2.5	5.5	g	Ex II 2GD h T6 IIC T85°C	8411 0564 46
LZB54-L-AV007-11	1.18	1.58	380	30	22	48	35	60	44	650	22.0	47.0	2.5	5.5	g	Ex II 2GD h T6 IIC T85°C	8411 0564 53
LZB54-L-AV005-11	1.18	1.58	280	40	30	65	48	80	59	500	22.0	47.0	2.5	5.5	g	Ex II 2GD h T6 IIC T85°C	8411 0564 61
LZB54-L-AV0025-11	1.15	1.54	150	72	53	117	86	144	106	270	22.0	47.0	4.7	10.3	h	Ex II 2GD h T6 IIC T85°C	8411 0564 79
LZB54-L-AV0017-11	1.15	1.54	95	119	88	193	142	238	176	160	22.0	47.0	4.7	10.3	h	Ex II 2GD h T6 IIC T85°C	8411 0564 87
LZB54-L-AV0012-11	1.15	1.54	70	161	119	261	193	322	237	120	22.0	47.0	4.7	10.3	h	Ex II 2GD h T6 IIC T85°C	8411 0564 95
Reversible (Keyed shaft)																	
LZB54-L-AR130-11	0.82	1.10	6800	1.15	0.85	1.4	1.03	2.3	1.7	12000	18.0	38.0	2.4	5.2	g	Ex II 2GD h T4 IIC T110°C	8411 0563 05
LZB54-L-AR035-11	0.82	1.10	1960	4.0	3.0	5.1	3.8	8.0	5.9	3700	18.0	38.0	2.4	5.2	g	Ex II 2GD h T4 IIC T110°C	8411 0563 13
LZB54-L-AR020-11	0.82	1.10	1190	6.6	4.9	8.4	6.2	13.2	9.7	2300	18.0	38.0	2.4	5.2	g	Ex II 2GD h T4 IIC T110°C	8411 0563 21
LZB54-L-AR015-11	0.82	1.10	880	8.9	6.6	11	8.1	17.8	13.1	1700	18.0	38.0	2.4	5.2	g	Ex II 2GD h T4 IIC T110°C	8411 0563 39
LZB54-L-AR008-11	0.80	1.07	430	18	13.3	23	17	36	27	800	18.0	38.0	2.5	5.5	g	Ex II 2GD h T6 IIC T85°C	8411 0563 47
LZB54-L-AR005-11	0.80	1.07	260	30	22	38	28	60	44	500	18.0	38.0	2.5	5.5	g	Ex II 2GD h T6 IIC T85°C	8411 0563 54
LZB54-L-AR004-11	0.80	1.07	190	40	30	51	38	80	59	370	18.0	38.0	2.5	5.5	g	Ex II 2GD h T6 IIC T85°C	8411 0563 62
LZB54-L-AR0020-11	0.79	1.06	105	72	53	93	69	144	106	190	18.0	38.0	4.7	10.3	h	Ex II 2GD h T6 IIC T85°C	8411 0563 70
LZB54-L-AR0012-11	0.79	1.06	65	119	88	153	113	238	176	120	18.0	38.0	4.7	10.3	h	Ex II 2GD h T6 IIC T85°C	8411 0563 88
LZB54-L-AR0009-11	0.79	1.06	47	161	119	207	153	322	237	90	18.0	38.0	4.7	10.3	h	Ex II 2GD h T6 IIC T85°C	8411 0563 96

[1] *For Shaft loading curves, see page 14.*

All versions

Clockwise/
Anti-clockwise

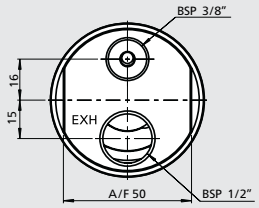

Reversible

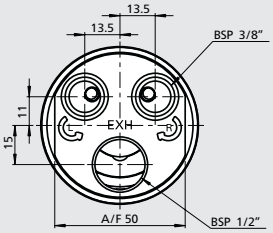

Clockwise/ Anti-clockwise

LZB54-L-A180	LZB54-L-AV180
LZB54-L-A050	LZB54-L-AV050
LZB54-L-A030	LZB54-L-AV030
LZB54-L-A020	LZB54-L-AV020
LZB54-L-A010	LZB54-L-AV010
LZB54-L-A007	LZB54-L-AV007
LZB54-L-A005	LZB54-L-AV005

Reversible

LZB54-L-AR130
LZB54-L-AR035
LZB54-L-AR020
LZB54-L-AR015
LZB54-L-AR008
LZB54-L-AR005
LZB54-L-AR004

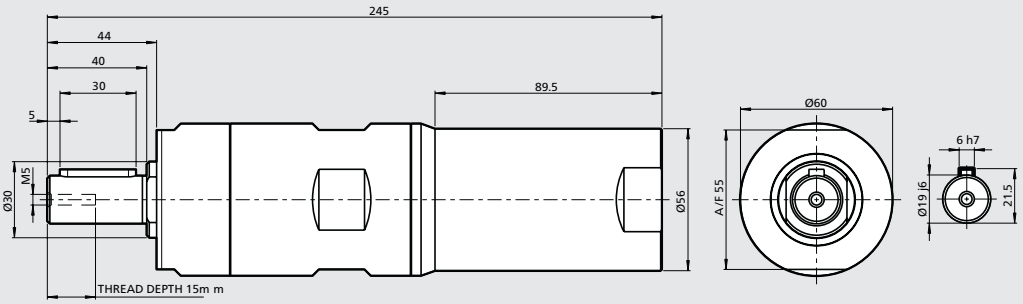

Optional mountings

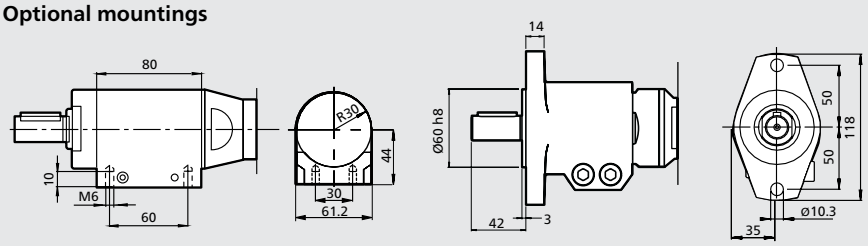

Foot Ordering No. 4430 0178 80

Flange Ordering No. 4430 0569 84

Clockwise/ Anti-clockwise

LZB54-L-A0025
LZB54-L-A0017
LZB54-L-A0012
LZB54-L-AV0025
LZB54-L-AV0017
LZB54-L-AV0012

Reversible

LZB54-L-AR0020
LZB54-L-AR0012
LZB54-L-AR0009

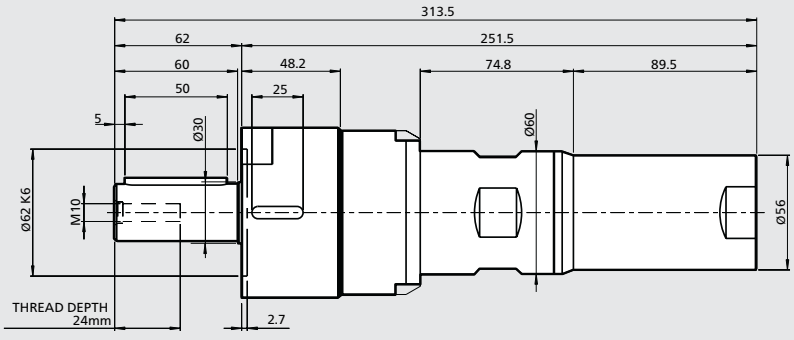

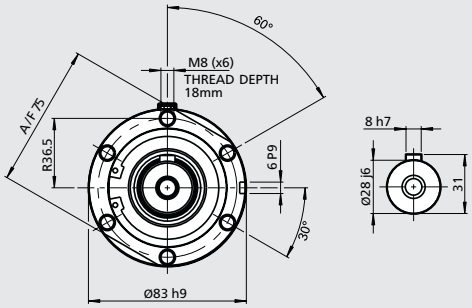

Vane motors **LZB54-RL**

Stainless steel and lubrication free

0.80 – 1.20 kW
1.07 – 1.61hp



Material in parts:

- Casing and front part stainless steel: ISO 683/XIII Type 17, SS 14 2346, DIN 17440 X12CrNiS188
- Outgoing shaft and gear rim stainless steel: ISO 683/XIII Type 9b,SS 14 2321, DIN 17440 X22CrNi17
- 100% Silicon free
- Grease that conforms to Food Grade regulations

EX certification valid for fixture mounted use only with a maximum surrounding temperature of +40°C (104°F).

For optional stainless steel motor cell, vane kits and other accessories see chapter Accessories

Data at air pressure 6.3 bar (91 psi)

Model Lubrication free	Max Output		Speed at max out-put	Torque at max output		Min starting torque		Stall torque		Free speed	Air consumption at max output		weight		Shaft loa-ding code[1)]	ATEX code	Ordering No
	Kw	hp	r/min	Nm	lb-ft	Nm	lb-ft	Nm	lb-ft	r/min	l/s	cfm	kg	lb			
Clockwise rotation (Keyed shaft)																	
LZB54-RL-A180-11	1.20	1.61	10000	1.15	0.85	1.80	1.33	2.30	1.70	17500	22.00	47.00	3.00	6.6	g	Ex II 2GD h T4 IIC T110°C	8411 0569 77
LZB54-RL-A050-11	1.20	1.61	2900	4.00	3.00	6.40	4.70	8.00	5.90	5100	22.00	47.00	3.00	6.6	g	Ex II 2GD h T4 IIC T110°C	8411 0569 85
LZB54-RL-A030-11	1.20	1.61	1750	6.60	4.90	10.50	7.70	13.20	9.70	3100	22.00	47.00	3.00	6.6	g	Ex II 2GD h T4 IIC T110°C	8411 0569 93
LZB54-RL-A020-11	1.20	1.61	1300	8.90	6.60	14.00	10.30	17.80	13.10	2300	22.00	47.00	3.00	6.6	g	Ex II 2GD h T4 IIC T110°C	8411 0570 03
LZB54-RL-A010-11	1.18	1.58	630	18	13.30	29	21.00	36	27	1050	22.00	47.00	3.10	6.8	g	Ex II 2GD h T4 IIC T110°C	8411 0570 11
LZB54-RL-A007-11	1.18	1.58	380	30	22.00	48	35.00	60	44	650	22.00	47.00	3.10	6.8	g	Ex II 2GD h T4 IIC T110°C	8411 0570 29
LZB54-RL-A005-11	1.18	1.58	280	40	30.00	65	48.00	80	59	500	22.00	47.00	3.10	6.8	g	Ex II 2GD h T4 IIC T110°C	8411 0570 37
Reversible (Keyed shaft)																	
LZB54-RL-AR130-11	0.82	1.10	6800	1.15	0.85	1.40	1.03	2.30	1.70	12000	18.00	38.00	3.00	6.6	g	Ex II 2GD h T4 IIC T110°C	8411 0570 45
LZB54-RL-AR035-11	0.82	1.10	1960	4.00	3.00	5.10	3.80	8.00	5.90	3700	18.00	38.00	3.00	6.6	g	Ex II 2GD h T4 IIC T110°C	8411 0570 52
LZB54-RL-AR020-11	0.82	1.10	1190	6.60	4.90	8.40	6.20	13.20	9.70	2300	18.00	38.00	3.00	6.6	g	Ex II 2GD h T4 IIC T110°C	8411 0570 60
LZB54-RL-AR015-11	0.82	1.10	880	8.90	6.60	11.00	8.10	17.80	13	1700	18.00	38.00	3.00	6.6	g	Ex II 2GD h T4 IIC T110°C	8411 0570 78
LZB54-RL-AR008-11	0.80	1.07	430	18	13.30	23	17.00	36	27	800	18.00	38.00	3.10	6.8	g	Ex II 2GD h T4 IIC T110°C	8411 0570 86
LZB54-RL-AR005-11	0.80	1.07	260	30	22.00	38	28.00	60	44	500	18.00	38.00	3.10	6.8	g	Ex II 2GD h T4 IIC T110°C	8411 0570 94
LZB54-RL-AR004-11	0.80	1.07	190	40	30.00	51	38.00	80	59	370	18.00	38.00	3.10	6.8	g	Ex II 2GD h T4 IIC T110°C	8411 0571 00

[1)] For Shaft loading curves, see page 14.

NOTE: - If running motors with 100% dry air and no lubrication, performance can be reduced with 5-15% at max output.
- To optimize life time for a lubrication free motor, use lubricated air if the application allows it.

All versions

Clockwise/
Anti-clockwise

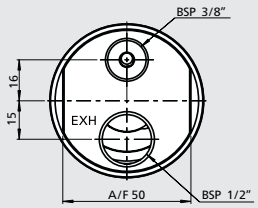

Reversible

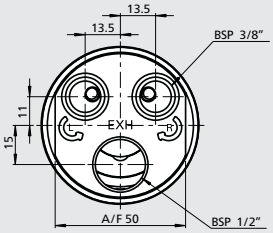

Clockwise/ Anti-clockwise

LZB54-RL-A180
LZB54-RL-A150
LZB54-RL-A030
LZB54-RL-A020
LZB54-RL-A010
LZB54-RL-A007
LZB54-RL-A005

Reversible

LZB54-RL-AR130
LZB54-RL-AR035
LZB54-RL-AR020
LZB54-RL-AR015
LZB54-RL-AR008
LZB54-RL-AR005
LZB54-RL-AR004

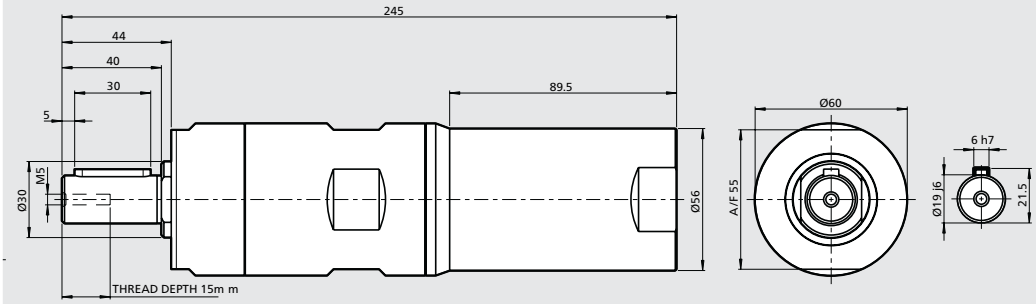

Optional mountings

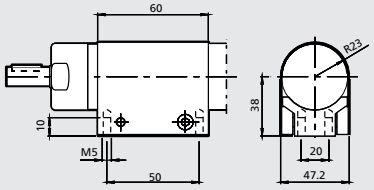

Foot Ordering No. 4430 0575 81

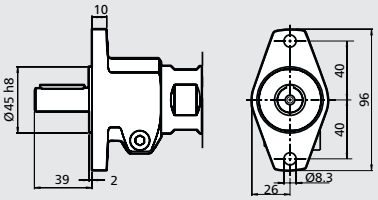

Aluminium
Flange Ordering No. 4430 0490 81

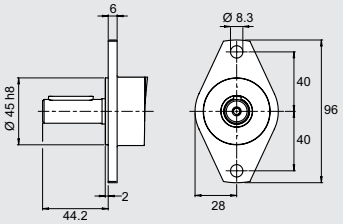

Stainless steel
Flange Ordering No. 4430 1483 80

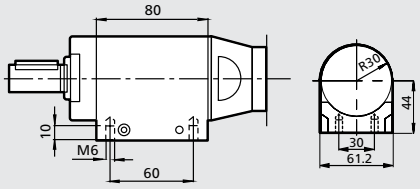

Foot Ordering No. 4430 0178 81

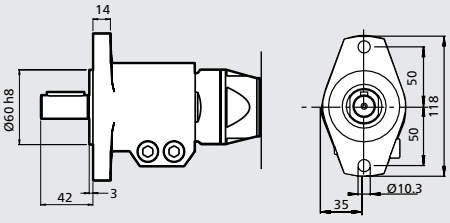

Aluminium
Flange Ordering No. 4430 0569 84

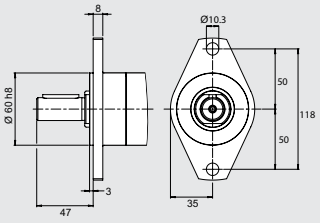

Stainless steel
Flange Ordering No. 4430 2357 80

Vane motors **LZB54-LB**

Brake module, lubrication free and reversible

0.79 – 0.82 kW
1.05 – 1.10 hp



Braking torque from 15–280 Nm.

The brake is activated by spring force and released by air pressure.

EX certification valid for fixture mounted use only with a maximum surrounding temperature of +40°C (104°F).

For optional stainless steel motor cell, vane kits and other accessories see chapter Accessories.

Data at air pressure 6.3 bar (91 psi)

Model Lubrication free	Max output kW	 hp	Speed at max output r/min	Torque at max output Nm	 lb-ft	Min starting torque Nm	 lb-ft	Stall torque Nm	 lb-ft	Braking torque Nm	 lb-ft	Free speed r/min	Air consump-tion at max output l/s	 cfm	Weight kg	 lb	Shaft loading code [1]	ATEX code	Ordering No.
Reversible (Keyed shaft)																			
LZB54-LB-AR015-11	0.82	1.1	880	8.9	6.6	11	8.1	17.8	13.1	15	11	1700	18	38	4.1	9	g	Ex II 2GD h T4 IIC T110°C	8411 0568 42
LZB54-LB-AR005-11	0.8	1.07	260	30	22	38	28	60	44	50	37	500	18	38	4.3	9.4	g	Ex II 2GD h T6 IIC T85°C	8411 0568 59
LZB54-LB-AR004-11	0.8	1.07	190	40	30	51	38	80	59	70	52	370	18	38	4.3	9.4	g	Ex II 2GD h T6 IIC T85°C	8411 0568 67
LZB54-LB-AR0020-11	0.79	1.06	105	72	53	93	69	144	106	125	92.5	190	18	38	6.4	14	h	Ex II 2GD h T6 IIC T85°C	8411 0568 75
LZB54-LB-AR0012-11	0.79	1.06	65	119	88	153	113	238	176	200	148	120	18	38	6.4	14	h	Ex II 2GD h T6 IIC T85°C	8411 0568 83
LZB54-LB-AR0009-11	0.79	1.06	47	161	119	207	153	322	237	280	206	90	18	38	6.4	14	h	Ex II 2GD h T6 IIC T85°C	8411 0569 10

[1] *For Shaft loading curves, see page 14.*
The brake needs minimum 5 bar to release. Performance curves same as standard motors.

NOTE: - If running motors with 100% dry air and no lubrication, performance can be reduced with 5-15% at max output.
- To optimize life time for a lubrication free motor, use lubricated air if the application allows it.

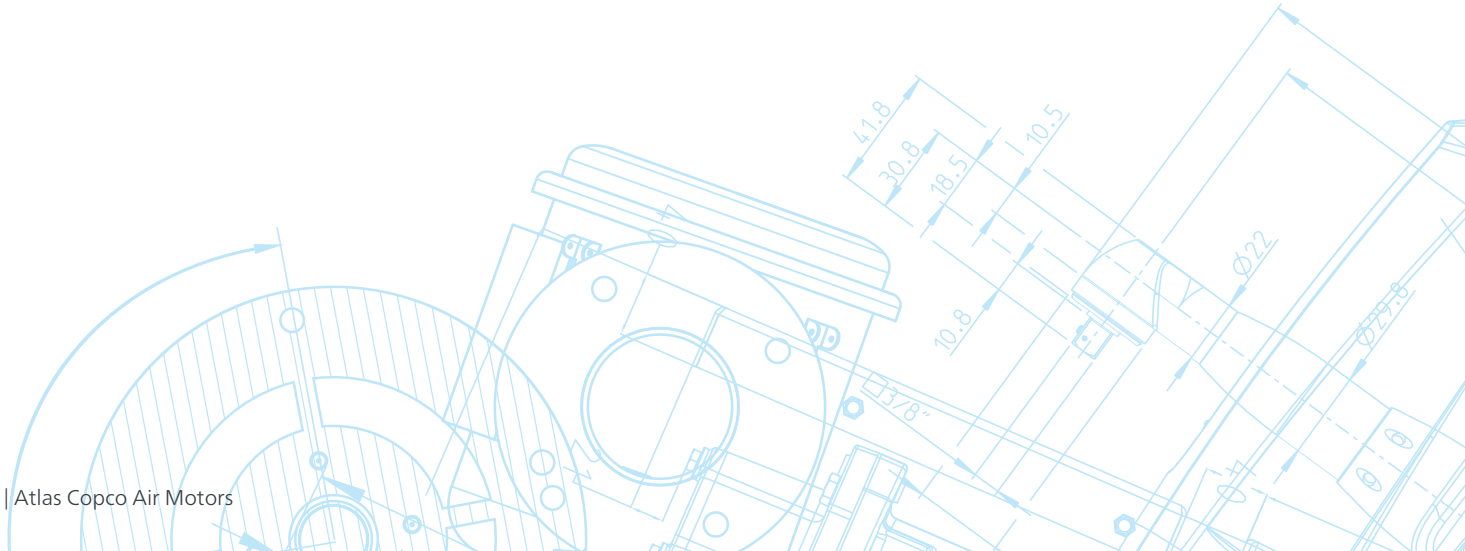

Reversible with brake
LZB54-LB-AR015
LZB54-LB-AR005
LZB54-LB-AR004

Reversible

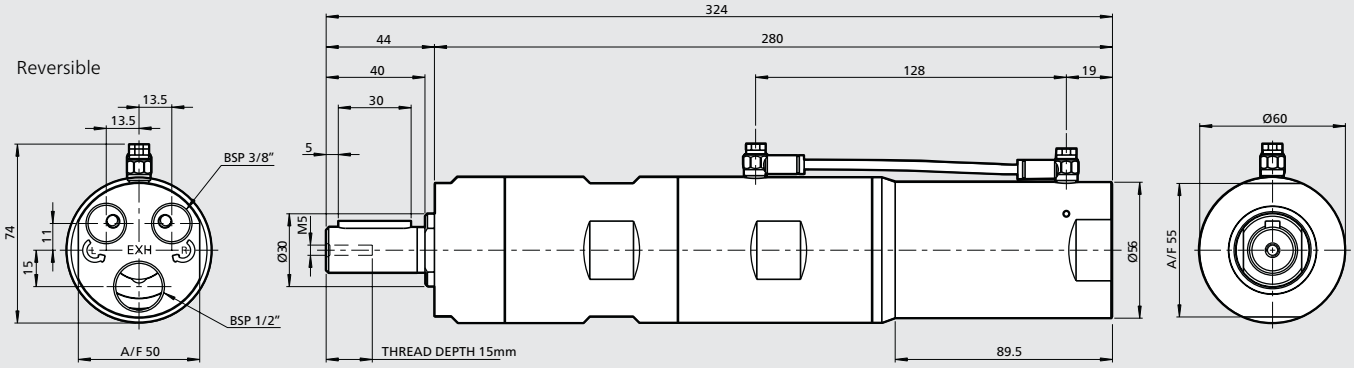

Optional mountings

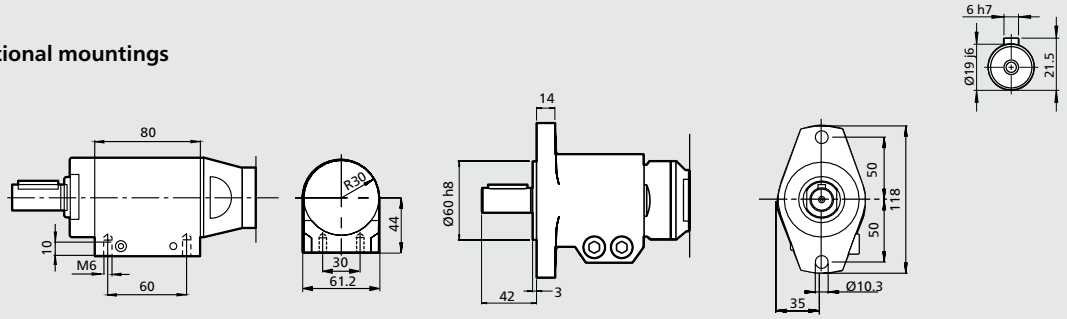

Foot Ordering No. 4430 0178 80

Flange Ordering No. 4430 0569 84

Reversible with brake
LZB54-LB-AR0020
LZB54-LB-AR0012
LZB54-LB-AR0009

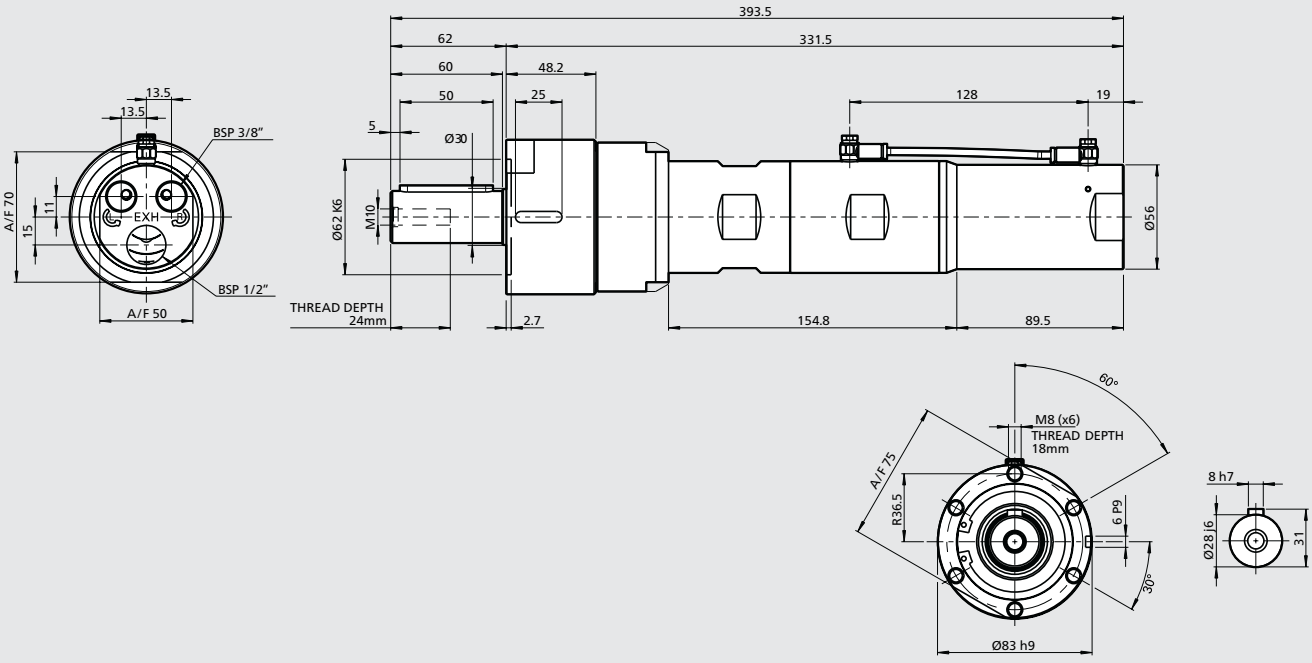

LZB54-L: Performance curves at air pressure 6.3 bar (91 psi)

Non-reversible (A and AV)

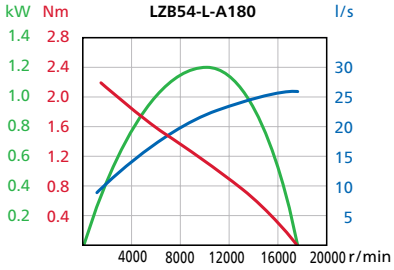

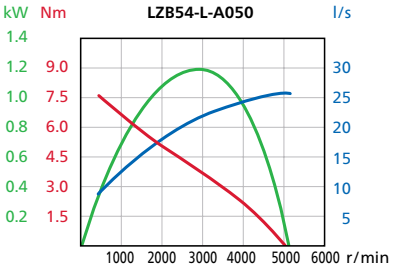

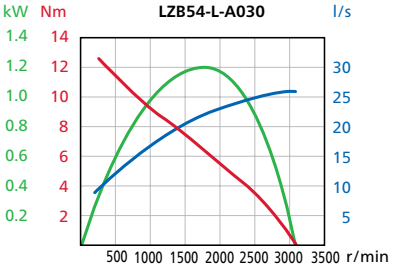

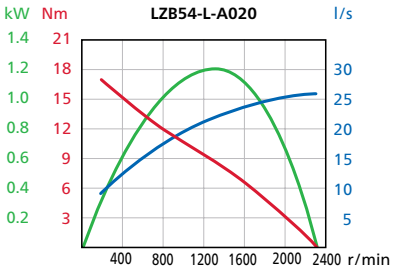

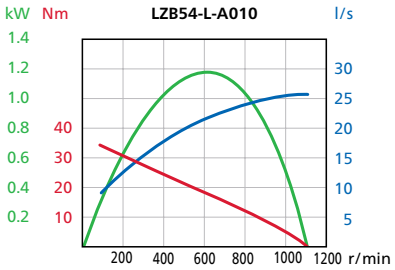

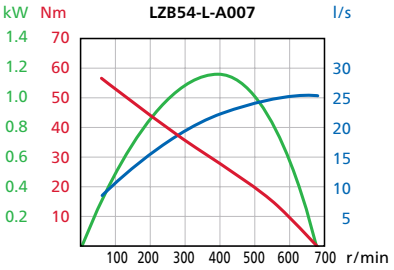

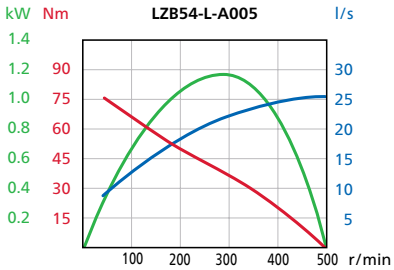

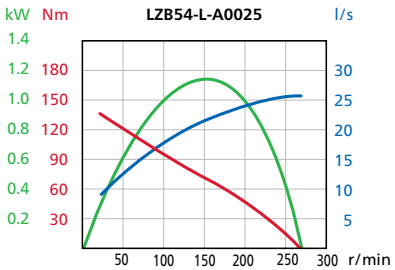

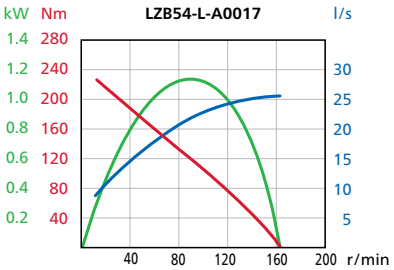

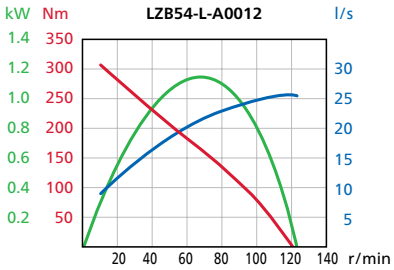

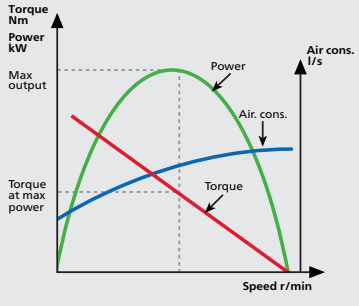

Conversion factors

1 kW	= 1.34 hp
1 Nm	= 0.74 lbf - ft
1 l/s	= 2.1 cfm
1 hp	= 0.75 kW
1 lbf-ft	= 1.36 Nm
1 cfm	= 0.47 l/s

For information about performance curves, see page 6.

LZB54-L: Performance curves at air pressure 6.3 bar (91 psi)

Reversible (AR)

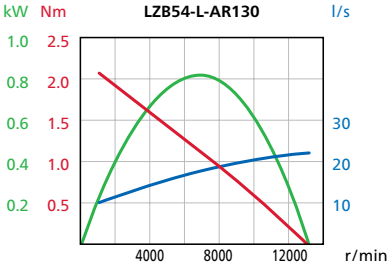

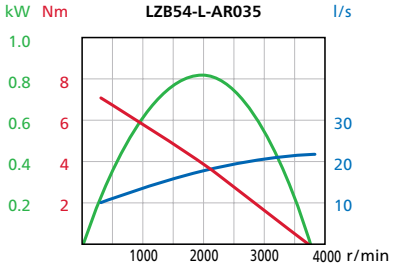

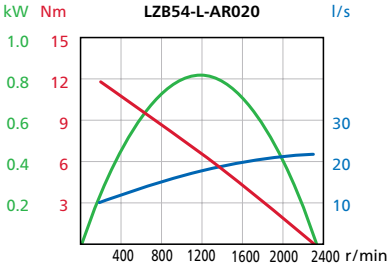

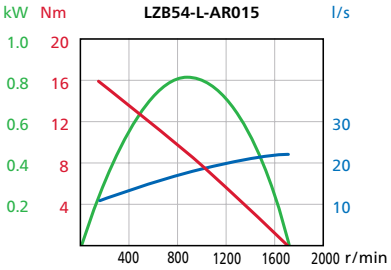

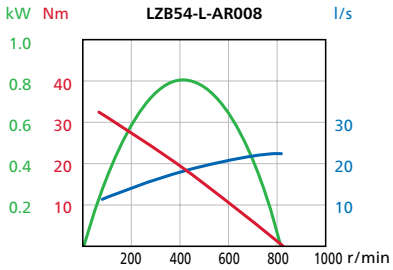

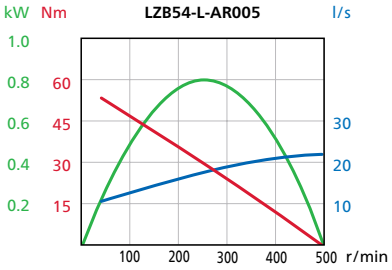

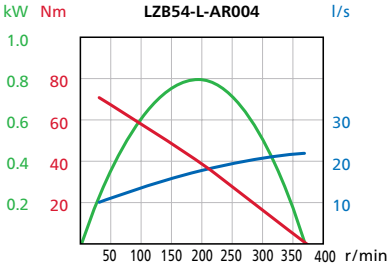

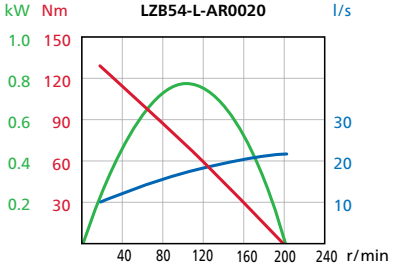

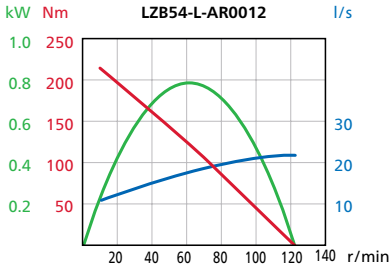

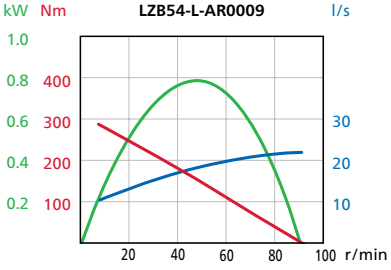

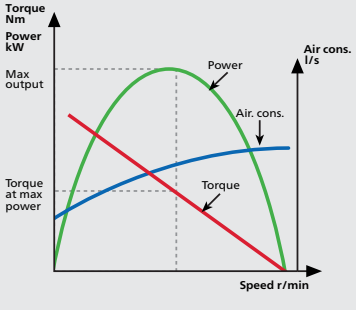

Conversion factors

1 kW	= 1.34 hp
1 Nm	= 0.74 lbf - ft
1 l/s	= 2.1 cfm
1 hp	= 0.75 kW
1 lbf-ft	= 1.36 Nm
1 cfm	= 0.47 l/s

For information about performance curves, see page 6.

Vane motors **LZB66-L**

1.41 – 1.87 kW
1.89 – 2.51 hp



EX certification valid for fixture mounted use only with a maximum surrounding temperature of +40°C (104°F).

For optional vanes and accessories see chapter Accessories.

Data at air pressure 6.3 bar (91 psi)

Model Lubricated	Max output kW	Max output hp	Speed at max output r/min	Torque at max output Nm	Torque at max output lb-ft	Min starting torque Nm	Min starting torque lb-ft	Stall torque Nm	Stall torque lb-ft	Free speed r/min	Air consumption at max output l/s	Air consumption at max output cfm	Weight kg	Weight lb	Shaft loading code [1]	ATEX code	Ordering No.
Clockwise rotation (Keyed shaft)																	
LZB66-L-A180-11	1.87	2.51	8200	2.2	1.62	3.2	2.4	4.4	3.2	16000	34	72	2.8	6.2	g	Ex II 2GD h T4 IIC T110°C	8411 0602 59
LZB66-L-A050-11	1.87	2.51	2400	7.6	5.6	11.3	8.3	15.2	11.2	4500	34	72	2.8	6.2	g	Ex II 2GD h T4 IIC T110°C	8411 0602 67
LZB66-L-A030-11	1.87	2.51	1440	12.5	9.2	18.6	13.7	25	18.4	2700	34	72	2.8	6.2	g	Ex II 2GD h T4 IIC T110°C	8411 0602 75
LZB66-L-A020-11	1.87	2.51	1060	17	12.5	25	18.4	34	25	2000	34	72	2.8	6.2	g	Ex II 2GD h T4 IIC T110°C	8411 0602 42
LZB66-L-A010-11	1.83	2.45	510	34	25	51	38	68	50	950	34	72	2.9	6.4	g	Ex II 2GD h T6 IIC T85°C	8411 0600 59
LZB66-L-A007-11	1.83	2.45	310	57	42	84	62	114	84	600	34	72	2.9	6.4	g	Ex II 2GD h T6 IIC T85°C	8411 0600 67
LZB66-L-A005-11	1.83	2.45	230	77	57	113	83	154	114	440	34	72	2.9	6.4	g	Ex II 2GD h T6 IIC T85°C	8411 0600 75
LZB66-L-A0025-11	1.80	2.41	125	139	103	205	151	278	205	230	34	72	5.1	11.1	h	Ex II 2GD h T6 IIC T85°C	8411 0600 83
LZB66-L-A0017-11	1.80	2.41	75	227	167	337	249	454	335	145	34	72	5.1	11.1	h	Ex II 2GD h T6 IIC T85°C	8411 0600 91
LZB66-L-A0012-11	1.80	2.41	55	308	227	456	336	616	454	110	34	72	5.1	11.1	h	Ex II 2GD h T6 IIC T85°C	8411 0602 83
Reversible (Keyed shaft)																	
LZB66-L-AR130-11	1.46	1.96	7500	1.9	1.4	2.4	1.8	3.8	2.8	13500	31	66	2.8	6.2	g	Ex II 2GD h T4 IIC T110°C	8411 0602 91
LZB66-L-AR035-11	1.46	1.96	2200	6.4	4.7	8.3	6.1	12.8	9.4	3900	31	66	2.8	6.2	g	Ex II 2GD h T4 IIC T110°C	8411 0603 09
LZB66-L-AR020-11	1.46	1.96	1320	10.5	7.7	13.5	10	21	15.5	2400	31	66	2.8	6.2	g	Ex II 2GD h T4 IIC T110°C	8411 0603 17
LZB66-L-AR015-11	1.46	1.96	970	14.3	10.5	18.5	13.6	29	21	1750	31	66	2.8	6.2	g	Ex II 2GD h T4 IIC T110°C	8411 0603 25
LZB66-L-AR008-11	1.43	1.92	470	29	21	37	27	58	43	830	31	66	2.9	6.4	g	Ex II 2GD h T6 IIC T85°C	8411 0601 25
LZB66-L-AR005-11	1.43	1.92	290	48	35	62	46	96	71	500	31	66	2.9	6.4	g	Ex II 2GD h T6 IIC T85°C	8411 0601 33
LZB66-L-AR004-11	1.43	1.91	210	64	47	84	62	128	94	370	31	66	2.9	6.4	g	Ex II 2GD h T6 IIC T85°C	8411 0601 41
LZB66-L-AR0020-11	1.41	1.89	115	117	86	151	111	233	172	200	31	66	5.1	11.1	h	Ex II 2GD h T6 IIC T85°C	8411 0601 58
LZB66-L-AR0012-11	1.41	1.89	70	191	141	249	184	382	282	120	31	66	5.1	11.1	h	Ex II 2GD h T6 IIC T85°C	8411 0601 66
LZB66-L-AR0009-11	1.41	1.89	50	259	191	337	249	518	382	90	31	66	5.1	11.1	h	Ex II 2GD h T6 IIC T85°C	8411 0603 33

[1] *For Shaft loading curves, see page 14.*

Compact mounting
Data at air pressure 6.3 bar (91 psi)

Model Lubricated	Max output kW	Max output hp	Speed at max output r/min	Torque at max output Nm	Torque at max output lb-ft	Min starting torque Nm	Min starting torque lb-ft	Stall torque Nm	Stall torque lb-ft	Free speed r/min	Air consumption at max output l/s	Air consumption at max output cfm	Weight kg	Weight lb	Shaft loading code [1]	ATEX code	Ordering No.
Clockwise rotation (Keyed shaft)																	
LZB66-L-A0025-15	1.80	2.41	125	139	103	205	151	278	205	230	34	72	5.3	11.7	h	Ex II 2GD h T6 IIC T85°C	8411 0600 18
LZB66-L-A0017-15	1.80	2.41	75	227	167	337	249	454	335	145	34	72	5.3	11.7	h	Ex II 2GD h T6 IIC T85°C	8411 0600 26
Reversible (Keyed shaft)																	
LZB66-L-AR0020-15	1.41	1.89	115	117	86	151	111	233	172	200	31	66	5.3	11.7	h	Ex II 2GD h T6 IIC T85°C	8411 0601 09
LZB66-L-AR0012-15	1.41	1.89	70	191	141	249	184	382	282	120	31	66	5.3	11.7	h	Ex II 2GD h T6 IIC T85°C	8411 0601 17

[1] *For Shaft loading curves, see page 14.*

All versions

Clockwise

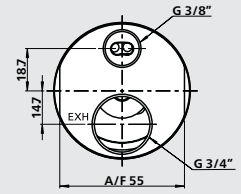

Reversible

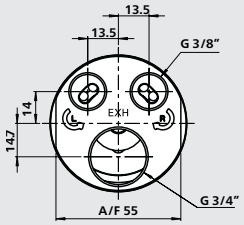

Clockwise

LZB66-L-A180
LZB66-L-A050
LZB66-L-A030
LZB66-L-A020
LZB66-L-A010
LZB66-L-A007
LZB66-L-A005

Reversible

LZB66-L-AR130
LZB66-L-AR035
LZB66-L-AR020
LZB66-L-AR015
LZB66-L-AR008
LZB66-L-AR005
LZB66-L-AR004

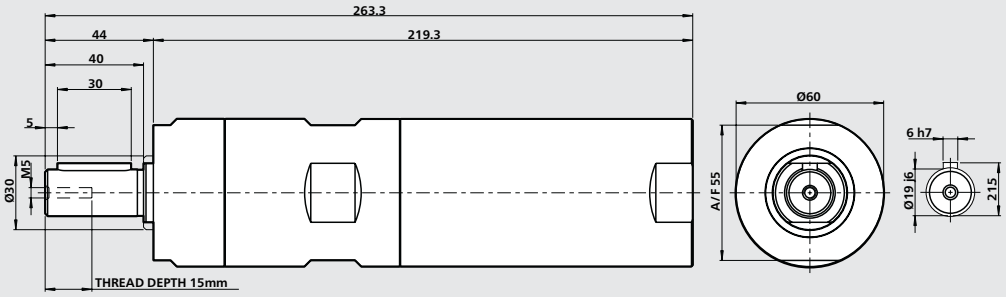

Optional mounting

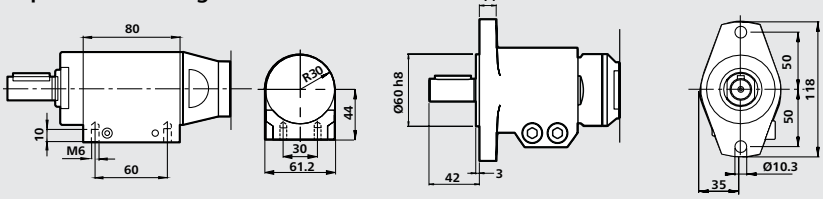

Foot Ordering No. 4430 0178 80

Flange Ordering No. 4430 0569 84

Clockwise

LZB66-L-A0025-11
LZB66-L-A0017-11
LZB66-L-A0012-11

Reversible

LZB66-L-AR0020-11
LZB66-L-AR0012-11
LZB66-L-AR0009-11

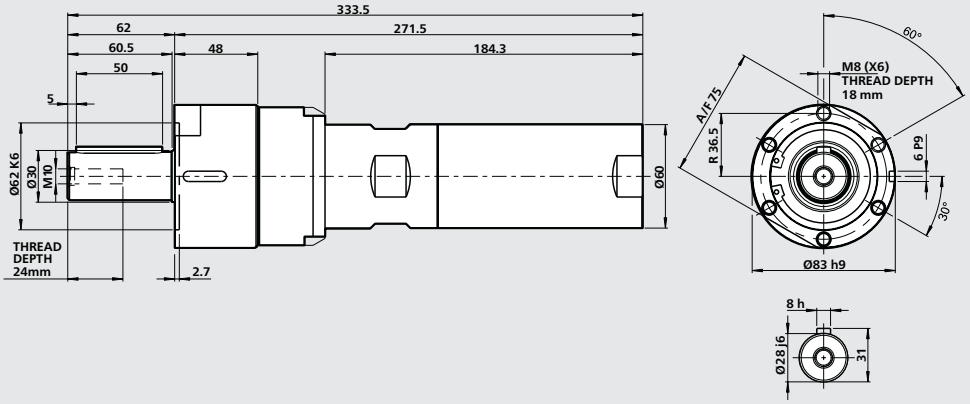

Clockwise

LZB66-L-A0025-15
LZB66-L-A0017-15

Reversible

LZB66-L-AR0020-15
LZB66-L-AR0012-15

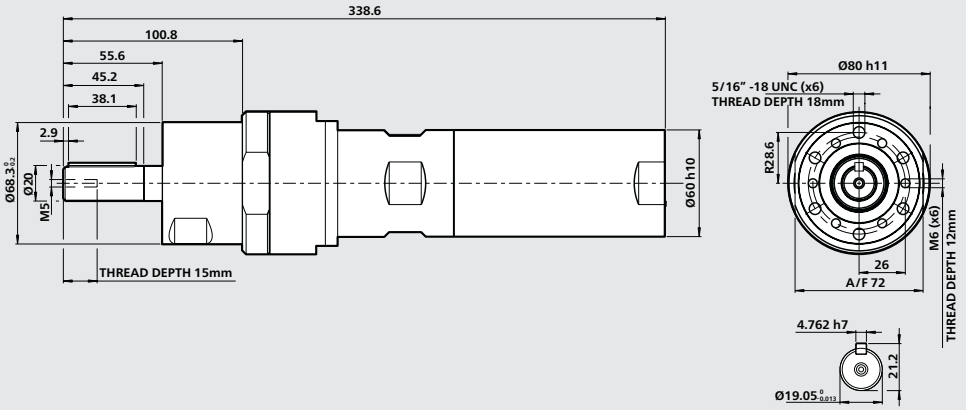

Vane motors **LZB66-L**

With angle head

1.79 kW
2.40 hp



EX certification valid for fixture mounted use only with a maximum surrounding temperature of +40°C (104°F).

For optional vanes and accessories see chapter Accessories.

Data at air pressure 6.3 bar (91 psi)

Model Lubricated	Max output kW	Max output hp	Speed at max output r/min	Torque at max output Nm	Torque at max output lb-ft	Min starting torque Nm	Min starting torque lb-ft	Stall torque Nm	Stall torque lb-ft	Free speed r/min	Air consumption at max output l/s	Air consumption at max output cfm	Weight kg	Weight lb	Shaft loading code [1]	ATEX code	Ordering No.
LZB66-L-A0025-16	1.79	2.40	128	136	101	199	146	272	201	244	34	72	6.0	13.1	-	Ex II 2GD h T6 IIC T85°C	8411 0605 82
LZB66-L-A0013-16	1.76	2.36	69	245	182	362	266	-	-	128	34	72	8.3	18.2	-	Ex II 2GD h T6 IIC T85°C	8411 0605 90

[1] *For Shaft loading curves, see page 14.*

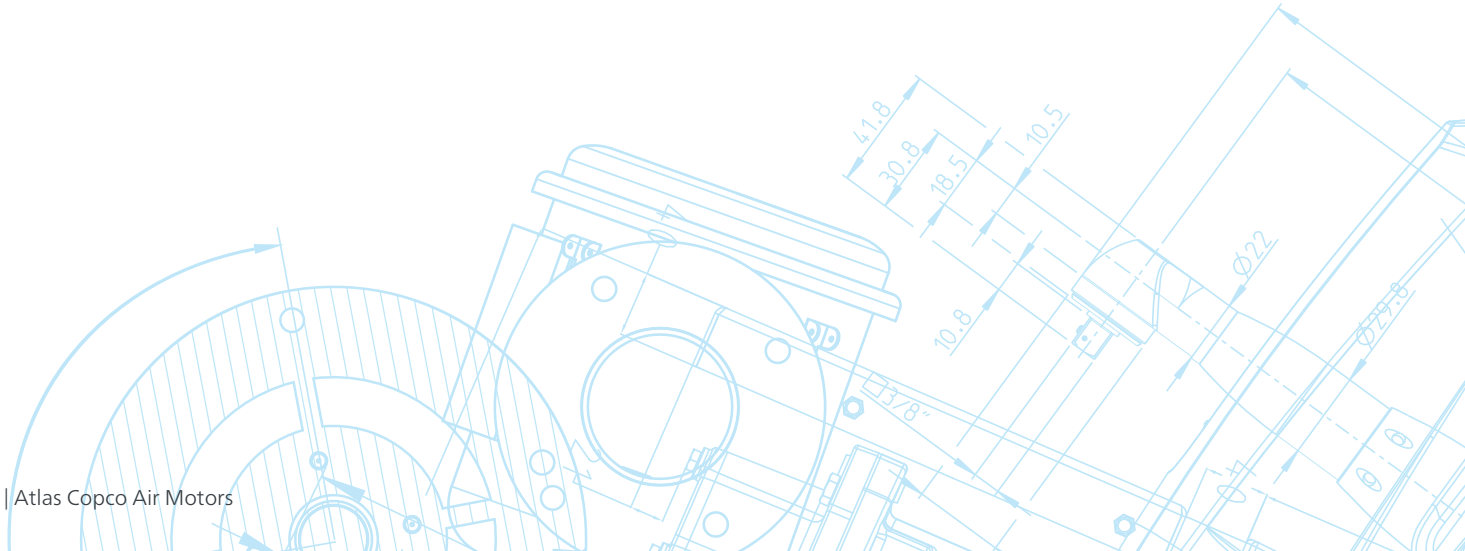

LZB66-A005-16

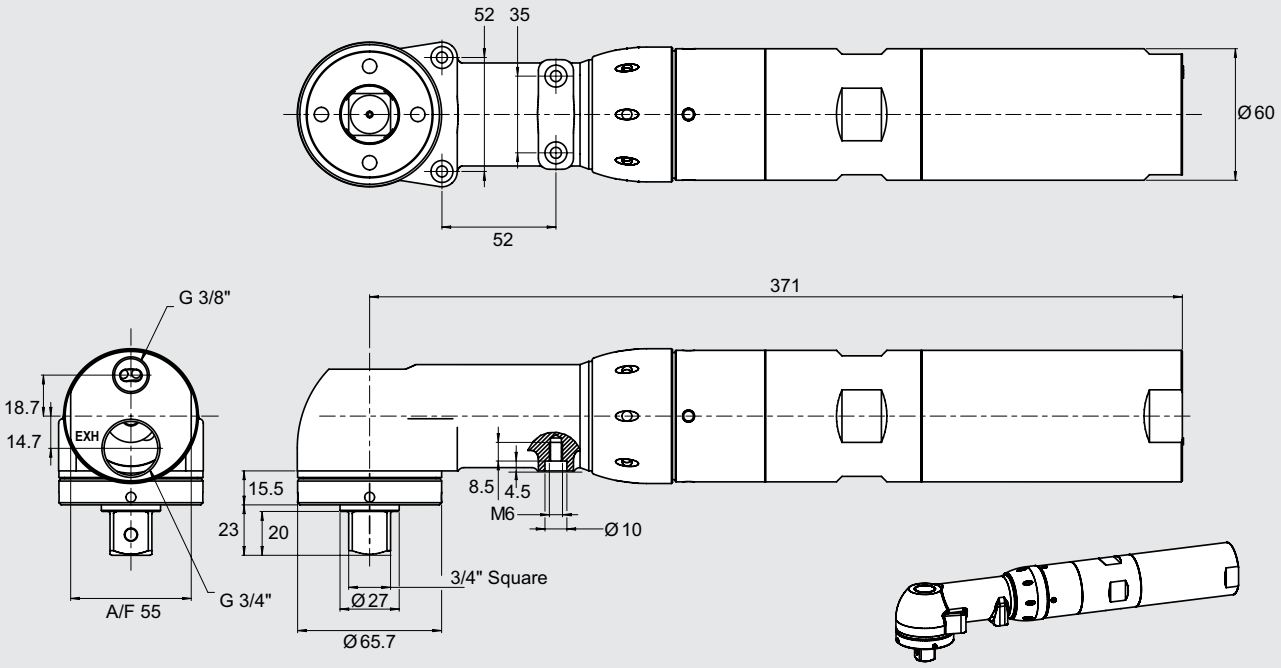

LZB66-A025-16

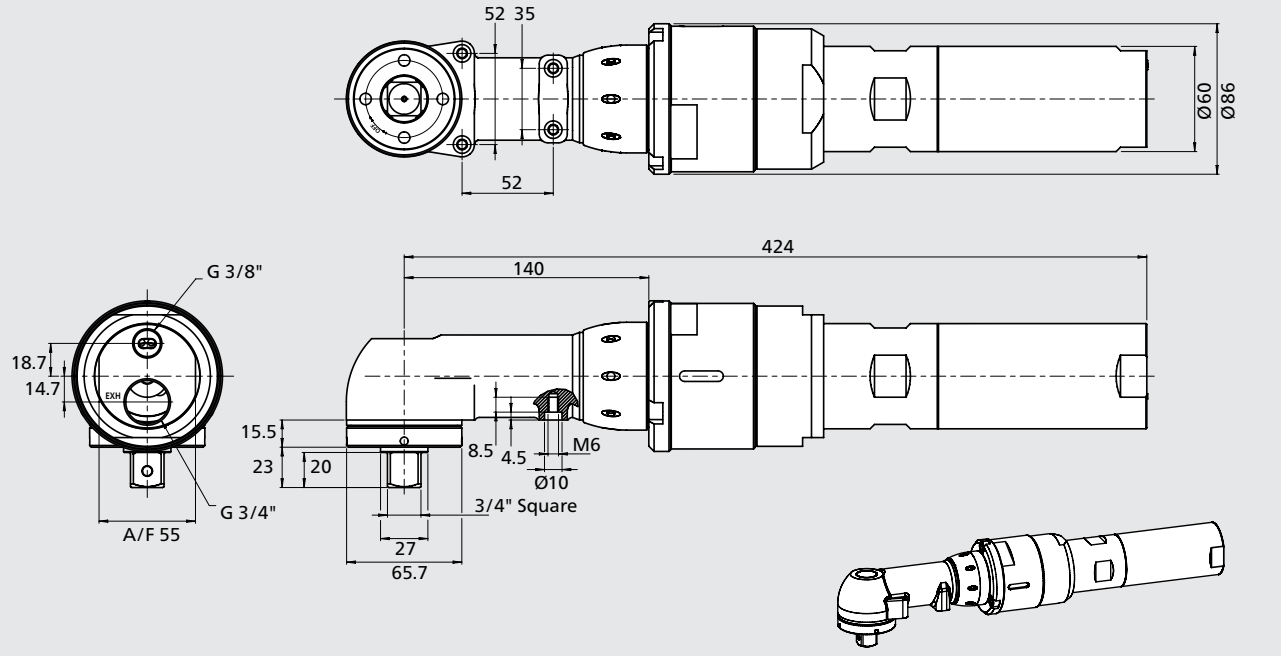

Vane motors **LZB66-RL**

Stainless steel and lubrication free

1.43 – 1.87 kW
1.91 – 2.51hp



Material in parts:

- Casing and front part stainless steel:
  ISO 683/XIII Type 17, SS 14 2346, DIN 17440 X12CrNiS188
- Outgoing shaft and gear rim stainless steel: ISO 683/XIII
  Type 9b, SS 14 2321, DIN 17440 X22CrNi17
- 100% Silicon free
- Grease that conforms to Food Grade regulations

EX certification valid for fixture mounted use only with a maximum surrounding temperature of +40°C (104°F).

For optional stainless steel motor cell, vane kits and other accessories see chapter Accessories.

Data at air pressure 6.3 bar (91 psi)

Model Lubrication free	Max Output		Speed at max out-put	Torque at max output		Min starting torque		Stall torque		Free speed	Air consumption at max output		weight		Shaft loading code[1)]	ATEX code	Ordering No
	Kw	hp	r/min	Nm	lb-ft	Nm	lb-ft	Nm	lb-ft	r/min	l/s	cfm	kg	lb			
Clockwise rotation (Keyed shaft)																	
LZB66-RL-A180-11	1.87	2.51	8200	2.20	1.62	3.20	2.40	4.40	3.20	16000	34.00	72.00	3.4	7.5	g	Ex II 2GD h T4 IIC T110°C	8411 0604 32
LZB66-RL-A050-11	1.87	2.51	2400	7.60	5.60	11.30	8.30	15.20	11.20	4500	34.00	72.00	3.4	7.5	g	Ex II 2GD h T4 IIC T110°C	8411 0604 40
LZB66-RL-A030-11	1.87	2.51	1440	12.50	9.20	18.60	13.70	25.00	18.40	2700	34.00	72.00	3.4	7.5	g	Ex II 2GD h T4 IIC T110°C	8411 0604 57
LZB66-RL-A020-11	1.87	2.51	1060	17.00	12.50	25.00	18.40	34.00	25.00	2000	34.00	72.00	3.4	7.5	g	Ex II 2GD h T4 IIC T110°C	8411 0604 65
LZB66-RL-A010-11	1.83	2.45	510	34	25.00	51	38.00	68	50	950	34.00	72.00	3.5	7.7	g	Ex II 2GD h T4 IIC T110°C	8411 0604 73
LZB66-RL-A007-11	1.83	2.45	310	57	42.00	84	62.00	114	84	600	34.00	72.00	3.5	7.7	g	Ex II 2GD h T4 IIC T110°C	8411 0604 81
LZB66-RL-A005-11	1.83	2.45	230	77	57.00	113	83.00	154	114	440	34.00	72.00	3.5	7.7	g	Ex II 2GD h T4 IIC T110°C	8411 0604 99
Reversible (Keyed shaft)																Ex II 2GD h T4 IIC T110°C	
LZB66-RL-AR130-11	1.46	1.96	7500	1.90	1.40	2.40	1.80	3.80	2.80	13500	31.00	66.00	3.4	7.5	g	Ex II 2GD h T4 IIC T110°C	8411 0605 09
LZB66-RL-AR035-11	1.46	1.96	2200	6.40	4.70	8.30	6.10	12.80	9.40	3900	31.00	66.00	3.4	7.5	g	Ex II 2GD h T4 IIC T110°C	8411 0605 17
LZB66-RL-AR020-11	1.46	1.96	1320	10.50	7.70	13.05	10.00	21.00	15.50	2400	31.00	66.00	3.4	7.5	g	Ex II 2GD h T4 IIC T110°C	8411 0605 25
LZB66-RL-AR015-11	1.46	1.96	970	14.30	10.50	18.05	13.60	29.00	21	1750	31.00	66.00	3.4	7.5	g	Ex II 2GD h T4 IIC T110°C	8411 0605 33
LZB66-RL-AR008-11	1.43	1.92	470	29	21.00	37	27.00	58	43	850	31.00	66.00	3.5	7.7	g	Ex II 2GD h T4 IIC T110°C	8411 0605 41
LZB66-RL-AR005-11	1.43	1.92	290	48	35.00	62	46.00	96	71	500	31.00	66.00	3.5	7.7	g	Ex II 2GD h T4 IIC T110°C	8411 0605 58
LZB66-RL-AR004-11	1.43	1.91	210	64	47.00	84	62.00	128	94	370	31.00	66.00	3.5	7.7	g	Ex II 2GD h T4 IIC T110°C	8411 0605 66

[1)] For Shaft loading curves, see page 14.

NOTE: - If running motors with 100% dry air and no lubrication, performance can be reduced with 5-15% at max output.
- To optimize life time for a lubrication free motor, use lubricated air if the application allows it.

All versions

Clockwise

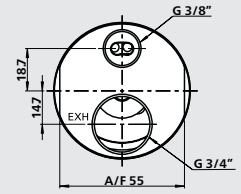

Reversible

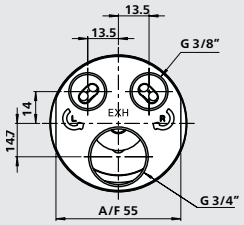

Clockwise	Reversible
LZB66-RL-A180	LZB66-RL-AR130
LZB66-RL-A050	LZB66-RL-AR035
LZB66-RL-A030	LZB66-RL-AR020
LZB66-RL-A020	LZB66-RL-AR015
LZB66-RL-A010	LZB66-RL-AR008
LZB66-RL-A007	LZB66-RL-AR005
LZB66-RL-A005	LZB66-RL-AR004

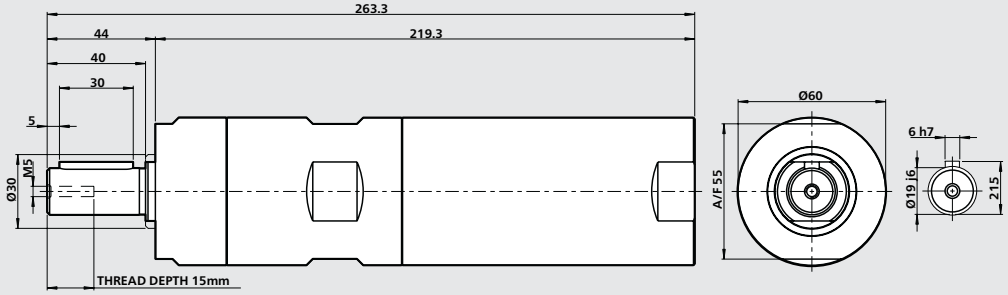

Optional mountings

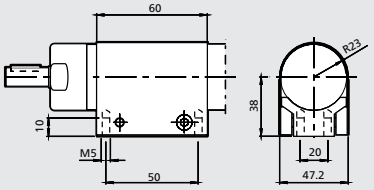

Foot Ordering No. 4430 0575 81

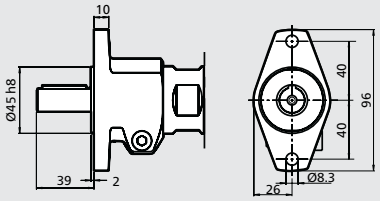

Aluminium
Flange Ordering No. 4430 0490 81

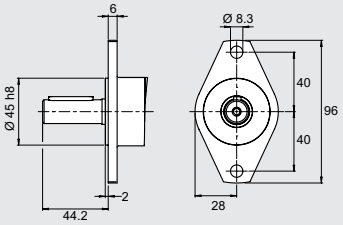

Stainless steel
Flange Ordering No. 4430 1483 80

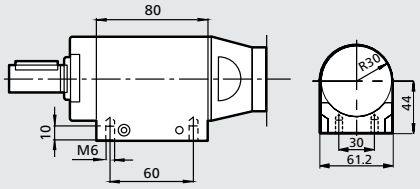

Foot Ordering No. 4430 0178 81

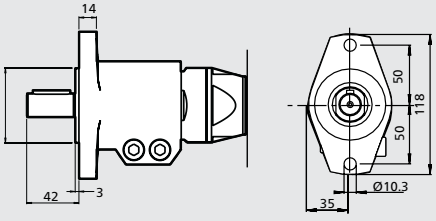

Aluminium
Flange Ordering No. 4430 0569 84

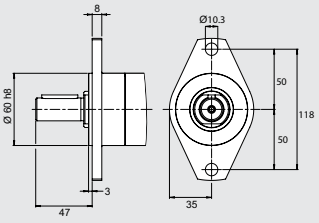

Stainless steel
Flange Ordering No. 4430 2357 80

LZB66-L, LZB66-RL: Performance curves at air pressure 6.3 bar (91 psi)

Non-reversible (A and AV)

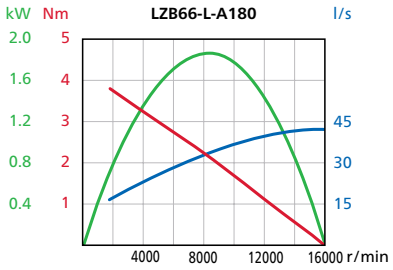

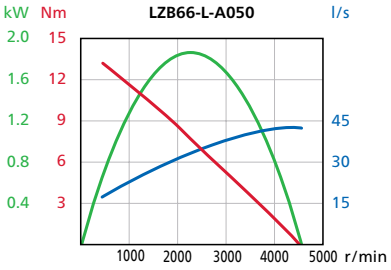

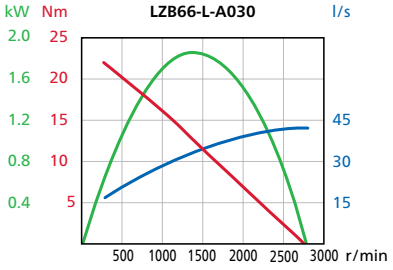

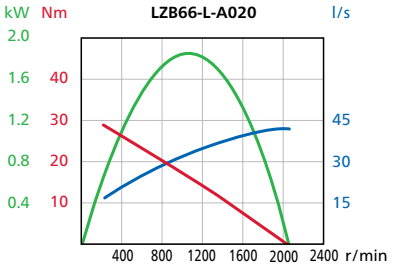

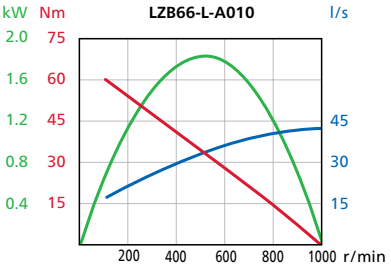

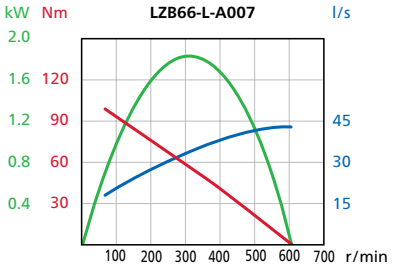

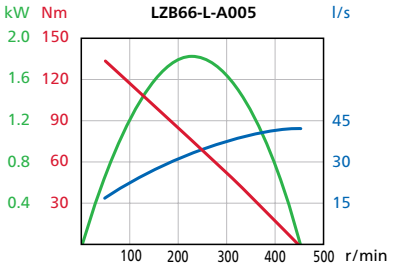

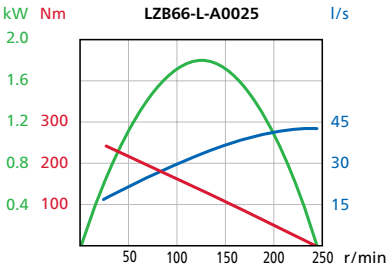

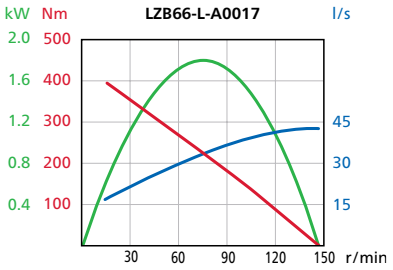

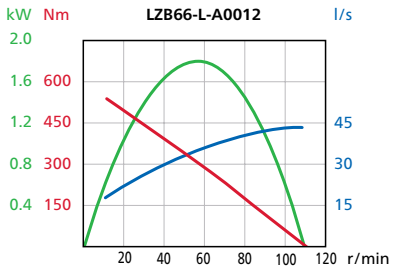

With right angle head

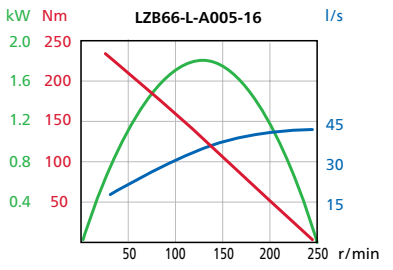

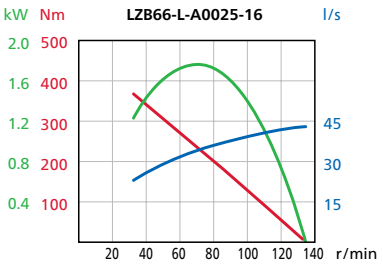

LZB66-L, LZB66-RL: Performance curves at air pressure 6.3 bar (91 psi)

Reversible (AR)

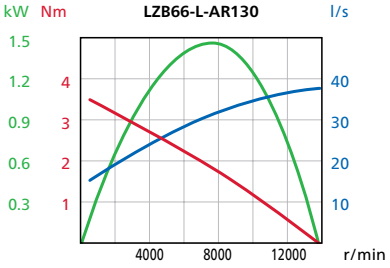

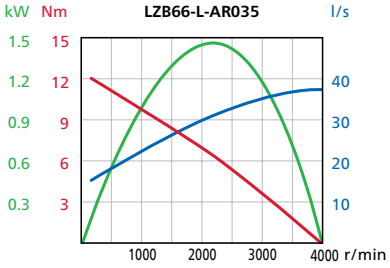

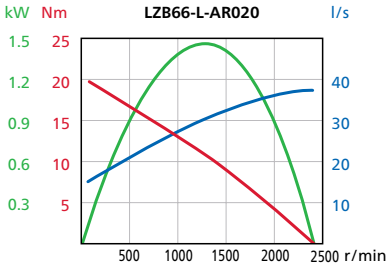

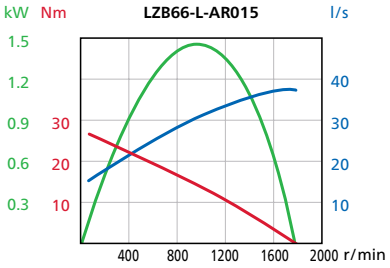

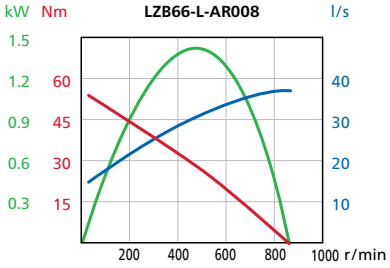

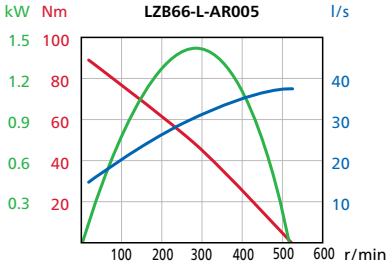

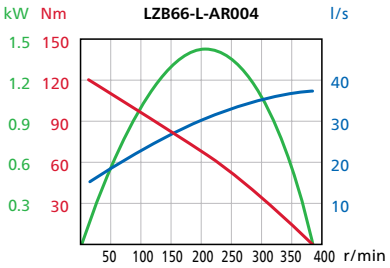

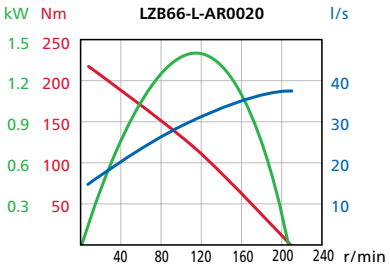

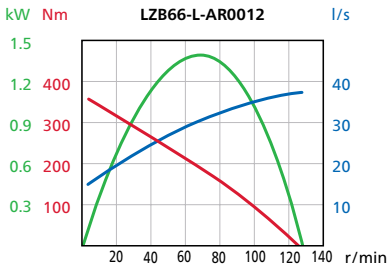

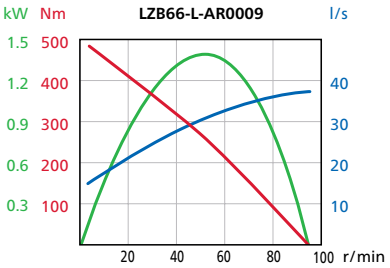

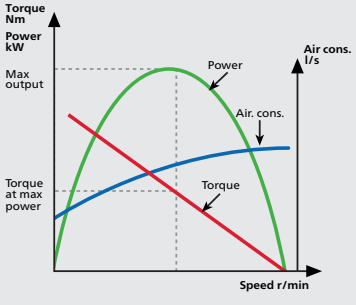

Conversion factors

1 kW	= 1.34 hp
1 Nm	= 0.74 lbf - ft
1 l/s	= 2.1 cfm
1 hp	= 0.75 kW
1 lbf-ft	= 1.36 Nm
1 cfm	= 0.47 l/s

For information about performance curves, see page 6.

Vane motors **LZB77-L**

2.35 – 2.80 kW
3.15 – 3.75 hp



EX certification valid for fixture mounted use only with a maximum surrounding temperature of +40°C (104°F).

For optional vanes and accessories see chapter Accessories.

Data at air pressure 6.3 bar (91 psi)

Model Lubricated	Max output kW	 hp	Speed at max output r/min	Torque at max output Nm	 lb-ft	Min starting torque Nm	 lb-ft	Stall torque Nm	 lb-ft	Free speed r/min	Air consumption at max output l/s	 cfm	Weight kg	 lb	Shaft loading code [1]	ATEX code	Ordering No.
Clockwise rotation (Keyed shaft)																	
LZB77-L-A027-15	2.80	3.75	1220	22	16	35	26	44	32	2600	52	110	8.4	18.5	h	Ex II 2GD h T4 IIC T110°C	8411 0700 25
LZB77-L-A008-15	2.77	3.71	350	75	55	121	89	150	111	750	52	110	8.4	18.5	h	Ex II 2GD h T6 IIC T85°C	8411 0700 70
LZB77-L-A007-15	2.77	3.71	310	85	63	137	101	170	125	660	52	110	8.4	18.5	h	Ex II 2GD h T6 IIC T85°C	8411 0700 17
LZB77-L-A005-15	2.77	3.71	210	123	91	199	147	246	181	460	52	110	8.4	18.5	h	Ex II 2GD h T6 IIC T85°C	8411 0700 88
LZB77-L-A004-15	2.77	3.71	160	166	122	269	198	332	245	340	52	110	8.4	18.5	h	Ex II 2GD h T6 IIC T85°C	8411 0700 96
LZB77-L-A0020-15	2.74	3.67	90	293	216	474	350	586	432	190	52	110	8.7	19.1	h	Ex II 2GD h T6 IIC T85°C	8411 0701 00
LZB77-L-A0017-15	2.74	3.67	80	332	245	536	395	664	490	165	52	110	8.7	19.1	h	Ex II 2GD h T6 IIC T85°C	8411 0700 09
Reversible (Keyed shaft)																	
LZB77-L-AR024-15	2.40	3.22	1280	18	13.3	24	18	36	27	2300	52	110	8.4	18.5	h	Ex II 2GD h T4 IIC T110°C	8411 0700 58
LZB77-L-AR007-15	2.38	3.19	370	62	46	84	62	124	91	680	52	110	8.4	18.5	h	Ex II 2GD h T6 IIC T85°C	8411 0701 18
LZB77-L-AR006-15	2.38	3.19	320	70	52	96	71	140	103	600	52	110	8.4	18.5	h	Ex II 2GD h T6 IIC T85°C	8411 0700 41
LZB77-L-AR004-15	2.38	3.19	220	102	75	139	103	204	150	420	52	110	8.4	18.5	h	Ex II 2GD h T6 IIC T85°C	8411 0701 26
LZB77-L-AR003-15	2.38	3.19	170	137	101	188	139	274	202	310	52	110	8.4	18.5	h	Ex II 2GD h T6 IIC T85°C	8411 0701 34
LZB77-L-AR0018-15	2.35	3.15	95	242	178	331	244	484	357	170	52	110	8.7	19.1	h	Ex II 2GD h T6 IIC T85°C	8411 0701 42
LZB77-L-AR0015-15	2.35	3.15	80	274	202	374	276	548	404	155	52	110	8.7	19.1	h	Ex II 2GD h T6 IIC T85°C	8411 0700 33

[1] *For Shaft loading curves, see page 14. NOTE: The motors have built-in silencer.*

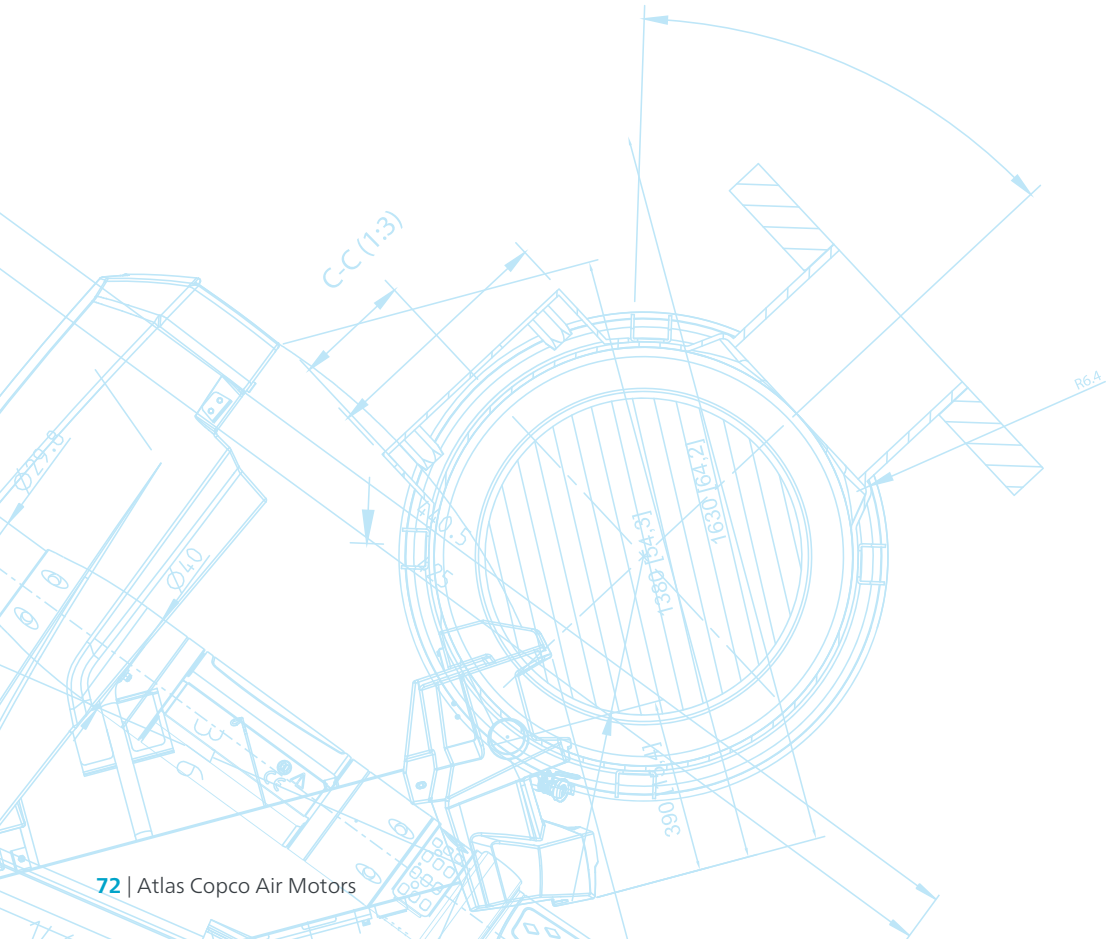

Dimensions (mm)

Conversion factor 1 mm = 0.04 inch

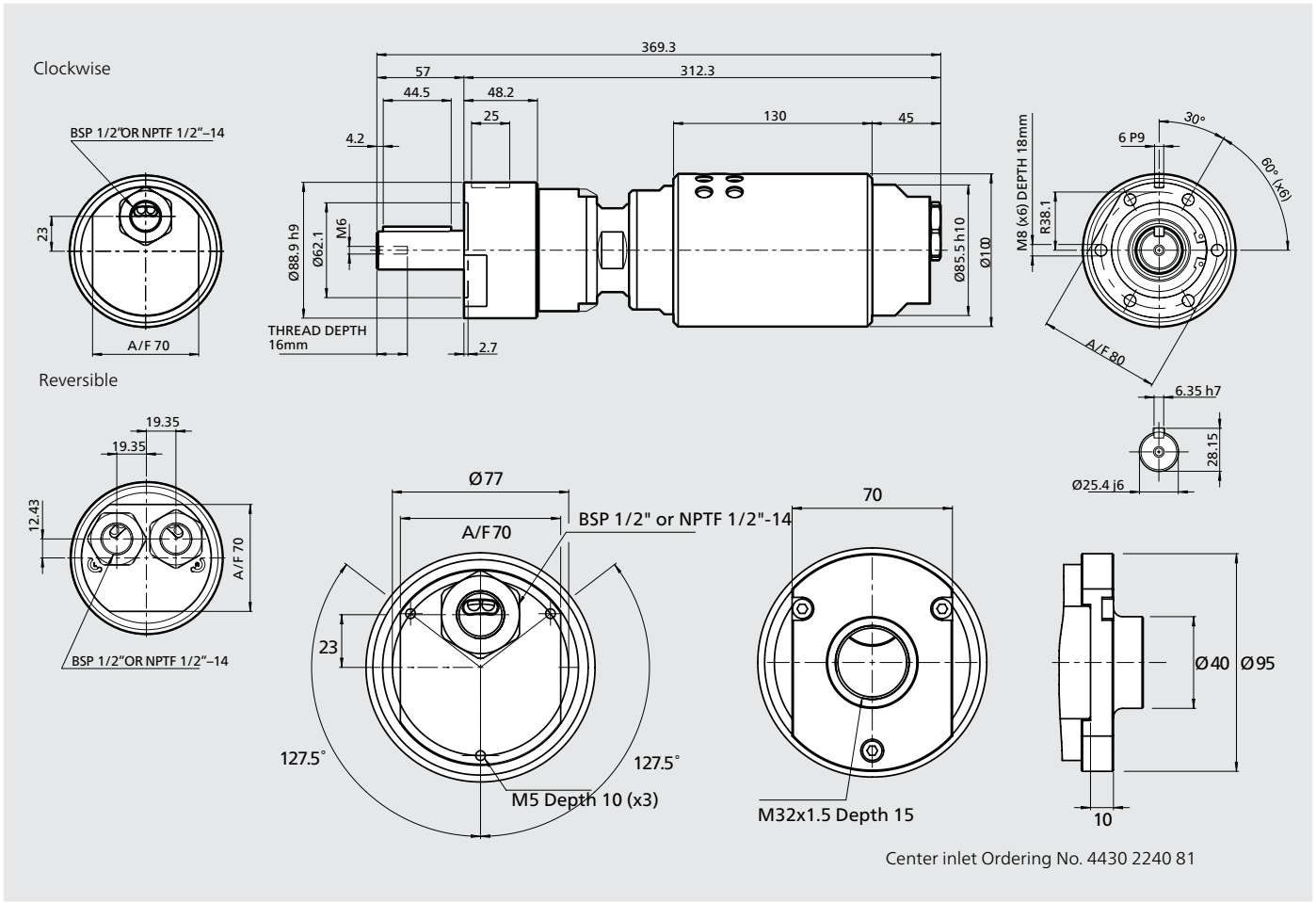

LZB77-L: Performance curves at air pressure 6.3 bar (91 psi)

Non-reversible (A)

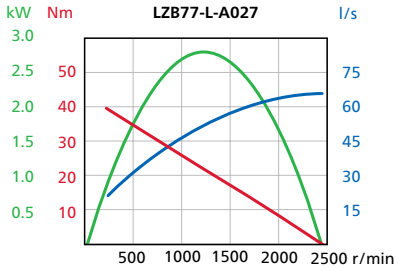

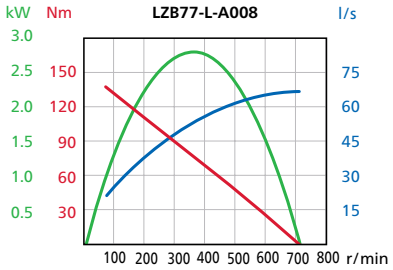

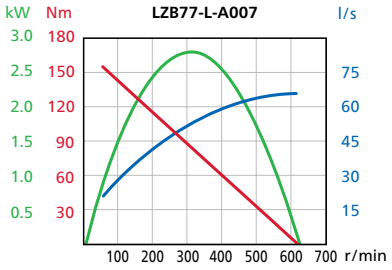

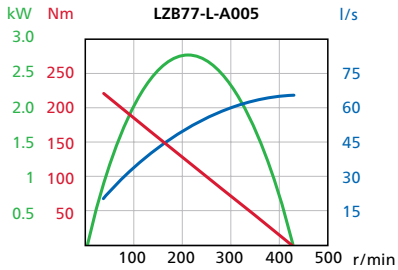

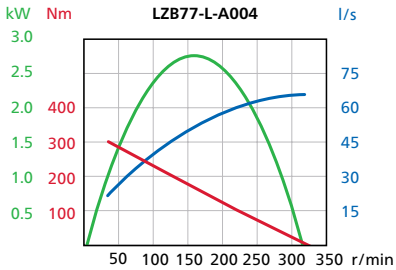

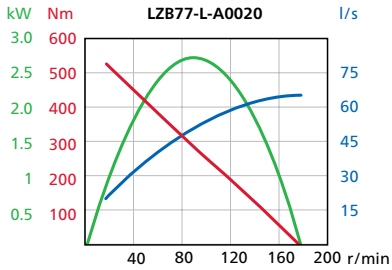

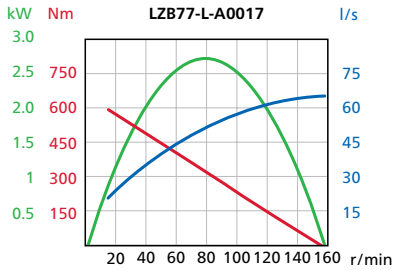

Reversible (AR)

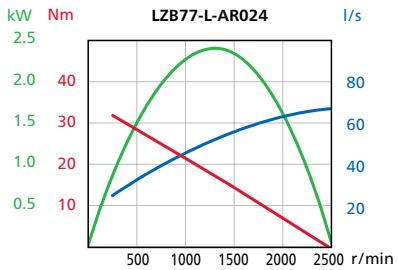

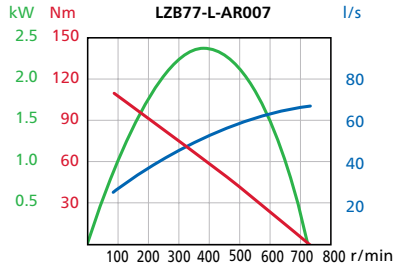

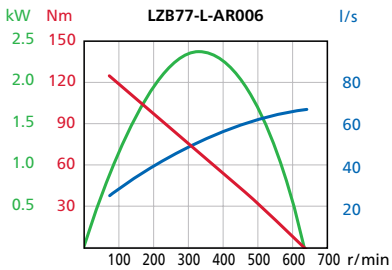

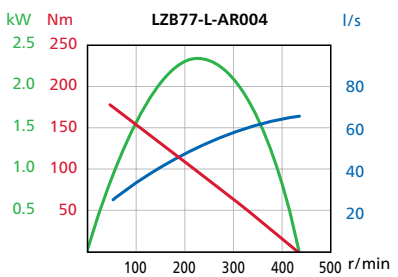

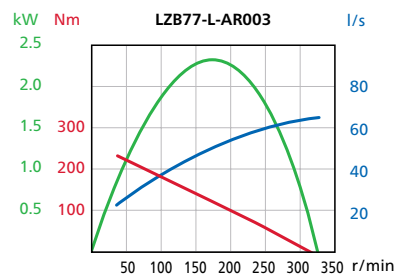

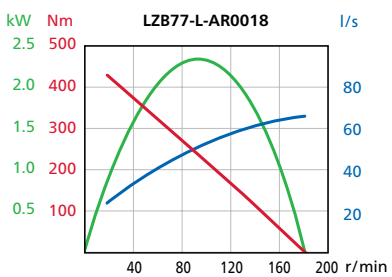

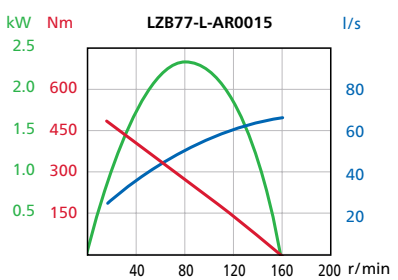

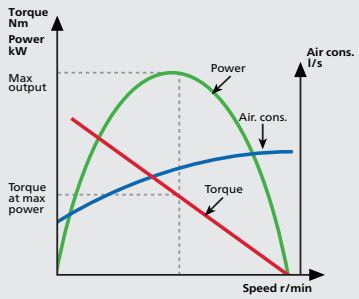

Conversion factors

1 kW	= 1.34 hp
1 Nm	= 0.74 lbf - ft
1 l/s	= 2.1 cfm
1 hp	= 0.75 kW
1 lbf-ft	= 1.36 Nm
1 cfm	= 0.47 l/s

For information about performance curves, see page 6.

Accessories
for air motors



Key chuck and quick chuck for LZB22/33-12

Chuck type	Mount	Body diameter mm	Capacity mm	Ordering No.
Key chuck	3/8"-24 UNF	30	0 - 6.5	4021 0283 00
Key chuck	3/8"-24 UNF	36	2.0 - 10.0	4021 0416 00
Key chuck	3/8"-24 UNF	46	2.0 - 13.0	4021 0289 00
Key chuck	1/2"-20 UNF	42.8	1.5 - 13	4021 0289 01
Quick chuck	3/8"-24 UNF	34	0 - 6.5	4021 0401 00
Quick chuck	3/8"-24 UNF	36	0 - 10.0	4021 0402 00
Quick chuck	3/8"-24 UNF	36	2.0 - 13.0	4021 0403 00



Threaded shafts for re-building standard motors

Motor	Thread dimension	Ordering No.
LZB42-L-A200	½"–20 UNF	4430 0868 80
LZB42-L-A065	½"–20 UNF	4430 0868 80
LZB42-L-A040	½"–20 UNF	4430 0868 81
LZB42-L-A025	½"–20 UNF	4430 0868 82
LZB42-L-A015	½"–20 UNF	4430 0869 80
LZB42-L-A010	½"–20 UNF	4430 0869 80
LZB42-L-A005	½"–20 UNF	4430 0869 80
LZB42-L-A0030	¾"–16 UNF	4430 0870 80
LZB42-L-A0020	¾"–16 UNF	4430 0870 80
LZB42-L-A0012	¾"–16 UNF	4430 0870 80
LZB54-L / LZB66-A180	½"–20 UNF	4430 0871 80
LZB54-L / LZB66-A050	½"–20 UNF	4430 0871 80
LZB54-L / LZB66-A030	½"–20 UNF	4430 0871 81
LZB54-L / LZB66 -A020	½"–20 UNF	4430 0871 82
LZB54-L / LZB66-A010	¾"–16 UNF	4430 0870 80
LZB54-L / LZB66- A007	¾"–16 UNF	4430 0870 80
LZB54-L / LZB66-A005	¾"–16 UNF	4430 0870 80



Collet chuck and collets for LZB22-12 to LZB33-12

Type	Capacity mm	Capacity in	Ordering No.
Collet holder cpl.			4110 0844 90
Collet	3		4150 0081 00
Collet	5		4150 0075 01
Collet	6		4150 0075 00
Collet	8	5/16"	4150 0074 00
Collet		1/8"	4150 0082 00
Collet		5/32"	4150 0648 00
Collet		3/16"	4150 0649 00
Collet		1/4"	4150 0076 00

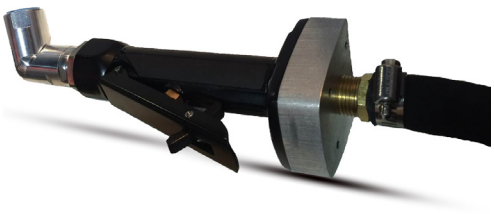

Safety remote control

Type	Ordering No.
Safety remote control	4430 2218 80

Accessories
for air motors

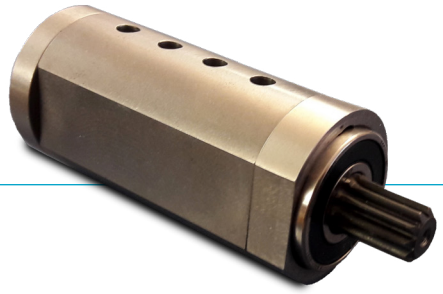

Stainless steel motor cell, LZB14

Model	Air Motor Ordering No.	Motor cell Ordering No.
Clockwise rotation (Key shaft)		
LZB14-RL-A190-11	8411 0122 09	4430 2194 80
LZB14-RL-A048-11	8411 0122 17	4430 2194 80
LZB14-RL-A029-11	8411 0122 25	4430 2194 80
LZB14-RL-A12-11	8411 0122 33	4430 2194 80
LZB14-RL-A007-11	8411 0122 41	4430 2194 80
Reversible (Key shaft)		
LZB14-RL-AR140-11	8411 0122 58	4430 2194 84
LZB14-RL-AR034-11	8411 0122 66	4430 2194 84
LZB14-RL-AR020-11	8411 0122 74	4430 2194 84
LZB14-RL-AR008-11	8411 0122 82	4430 2194 84
LZB14-RL-AR005-11	8411 0122 90	4430 2194 84

Stainless steel motor cell, LZB22

Model	Air Motor Ordering No.	Motor cell Ordering No.
Clockwise rotation (Key shaft)		
LZB22-RL-A120-11	8411 0219 11	4430 2304 83
LZB22-RL-A049-11	8411 0219 29	4430 2304 83
LZB22-RL-A036-11	8411 0219 37	4430 2305 83
LZB22-RL-A022-11	8411 0219 45	4430 2304 83
LZB22-RL-A011-11	8411 0219 52	4430 2304 83
LZB22-RL-A008-11	8411 0219 60	4430 2305 83
LZB22-RL-A005-11	8411 0219 78	4430 2304 83
Reversible (Key shaft)		
LZB22-RL-AR126-11	8411 0220 83	4430 2304 84
LZB22-RL-AR028-11	8411 0220 75	4430 2304 84
LZB22-RL-AR021-11	8411 0220 16	4430 2305 84
LZB22-RL-AR013-11	8411 0220 67	4430 2304 84
LZB22-RL-AR006-11	8411 0220 59	4430 2304 84
LZB22-RL-AR005-11	8411 0220 08	4430 2305 84
LZB22-RL-AR003-11	8411 0220 91	4430 2304 84

Stainless steel motor cell, LZB34

Model	Air Motor Ordering No.	Motor cell Ordering No.
Clockwise rotation (Key shaft)		
LZB34-RL-A210-11	8411 0338 41	4430 2291 83
LZB34-RL-A060-11	8411 0338 58	4430 2291 83
LZB34-RL-A033-11	8411 0338 66	4430 2291 83
LZB34-RL-A026-11	8411 0338 74	4430 2290 83
LZB34-RL-A013-11	8411 0338 82	4430 2291 83
LZB34-RL-A007-11	8411 0338 90	4430 2291 83
LZB34-RL-A005-11	8411 0339 08	4430 2290 83
Reversible (Key shaft)		
LZB34-RL-AR150-11	8411 0339 16	4430 2291 84
LZB34-RL-AR043-11	8411 0339 24	4430 2291 84
LZB34-RL-AR024-11	8411 0339 32	4430 2291 84
LZB34-RL-AR019-11	8411 0339 40	4430 2290 84
LZB34-RL-AR009-11	8411 0339 57	4430 2291 84
LZB34-RL-AR005-11	8411 0339 65	4430 2291 84
LZB34-RL-AR004-11	8411 0339 73	4430 2290 84

For the complete range LZB34-RLB- Ordering No. 4430 2291 84

Stainless steel motor cell, LZB46

Model	Air Motor Ordering No.	Motor cell Ordering No.
Clockwise rotation (Key shaft)		
LZB46-RL-A200-11	8411 0472 15	4430 1076 83
LZB46-RL-A065-11	8411 0472 23	4430 1076 83
LZB46-RL-A040-11	8411 0472 31	4430 1076 83
LZB46-RL-A025-11	8411 0472 49	4430 1206 80
LZB46-RL-A015-11	8411 0470 82	4430 1076 83
LZB46-RL-A010-11	8411 0471 08	4430 1076 83
LZB46-RL-A005-11	8411 0471 16	4430 1206 80
LZB46-RL-A0030-11	8411 0471 24	4430 1076 83
LZB46-RL-A0020-11	8411 0471 32	4430 1076 83
LZB46-RL-A0012-11	8411 0471 40	4430 1206 80
Reversible (Key shaft)		
LZB46-RL-AR170-11	8411 0472 56	4430 1076 84
LZB46-RL-AR050-11	8411 0472 64	4430 1076 84
LZB46-RL-AR030-11	8411 0472 72	4430 1076 84
LZB46-RL-AR020-11	8411 0472 80	4430 1206 84
LZB46-RL-AR010-11	8411 0471 57	4430 1076 84
LZB46-RL-AR007-11	8411 0471 65	4430 1076 84
LZB46-RL-AR004-11	8411 0471 73	4430 1206 84
LZB46-RL-AR0025-11	8411 0471 81	4430 1076 84
LZB46-RL-AR0015-11	8411 0471 99	4430 1076 84
LZB46-RL-AR0010-11	8411 0472 07	4430 1206 84

Stainless steel motor cell, LZB54

Model	Air Motor Ordering No.	Motor cell Ordering No.
Clockwise rotation (Key shaft)		
LZB54-RL-A180-11	8411 0569 77	4430 2375 83
LZB54-RL-A050-11	8411 0569 85	4430 2375 83
LZB54-RL-A030-11	8411 0569 93	4430 2312 83
LZB54-RL-A020-11	8411 0570 03	4430 2375 83
LZB54-RL-A010-11	8411 0570 11	4430 2375 83
LZB54-RL-A007-11	8411 0570 29	4430 2312 83
LZB54-RL-A005-11	8411 0570 37	4430 2375 83
Reversible (Key shaft)		
LZB54-RL-AR130-11		4430 2375 84
LZB54-RL-AR035-11	8411 0570 52	4430 2375 84
LZB54-RL-AR020-11	8411 0570 60	4430 2312 84
LZB54-RL-AR015-11	8411 0570 78	4430 2375 84
LZB54-RL-AR008-11	8411 0570 86	4430 2375 84
LZB54-RL-AR005-11	8411 0570 94	4430 2312 84
LZB54-RL-AR004-11	8411 0571 00	4430 2375 84

Stainless steel motor cell, LZB66

Model	Air Motor Ordering No.	Motor cell Ordering No.
Clockwise rotation (Key shaft)		
LZB66-RL-A180-11	8411 0604 32	4430 2478 80
LZB66-RL-A050-11	8411 0604 40	4430 2478 80
LZB66-RL-A030-11	8411 0604 57	4430 2483 80
LZB66-RL-A020-11	8411 0604 65	4430 2478 80
LZB66-RL-A010-11	8411 0604 73	4430 2478 80
LZB66-RL-A007-11	8411 0604 81	4430 2483 80
LZB66-RL-A005-11	8411 0604 99	4430 2478 80
Reversible (Key shaft)		
LZB66-RL-AR130-11	8411 0605 09	4430 2478 81
LZB66-RL-AR035-11	8411 0605 17	4430 2478 81
LZB66-RL-AR020-11	8411 0605 25	4430 2483 81
LZB66-RL-AR015-11	8411 0605 33	4430 2478 81
LZB66-RL-AR008-11	8411 0605 41	4430 2478 81
LZB66-RL-AR005-11	8411 0605 58	4430 2483 81
LZB66-RL-AR004-11	8411 0605 66	4430 2478 81

Vane sets, lubrication not needed

Motor	Ordering No.
LZB14	4210 0479 97
LZB22	4110 0861 97
LZB33/34	4110 0621 97
LZB42-L	4430 0517 97
LZB46-L	4430 0525 97
LZB54-L	4430 0543 97
LZB66-L	4430 1355 97
LZB77-L	4430 1487 97
LZL03	4430 1327 97
LZL05	4430 0282 97
LZL15	4430 0290 97
LZL25	4430 0298 97
LZL35	4430 1086 97

NOTE: If running motors with 100% dry air and no lubrication, performance can be reduced by 5-15% at max output.

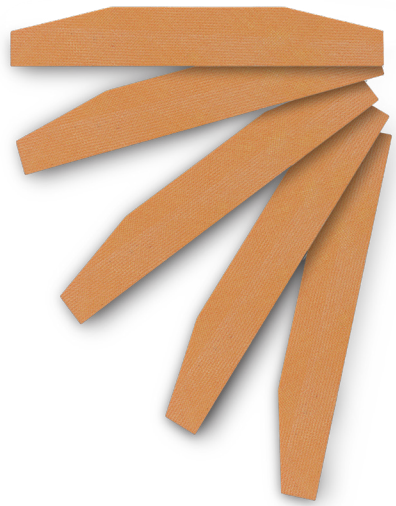

Vane sets, lubrication needed

Motor	Ordering No.
LZB14-L	4210 0479 90
LZB22-L	4110 0861 90
LZB33-L	4110 0621 90
LZB42-L	4430 0517 90
LZB46-L	4430 0525 90
LZB54-L	4430 0543 90
LZB66-L	4430 1355 90
LZB77-L	4430 1487 90
LZL03	4430 1327 90
LZL05	4430 0282 90
LZL15	4430 0290 90
LZL25	4430 0298 90
LZL35	4430 1086 90

Spring supported lubrication free vane sets
Not to be used over 3 bar

Motor	Ordering No.
LZB22	4430 0686 97
LZB33/34	4430 1349 97
LZB14	4430 1339 97



A B C D

Silencers

Motor	A Sinter bronze Ordering No.	B LBB Ordering No.	C ECSB-2 Ordering No.	D Blue Ordering No.
LZB14	9090 0507 00	-	9090 2100 01	-
LZB22 A, AV	9090 0508 00	4250 1878 83	9090 2100 01	-
LZB22 AR, LR	9090 0507 00	4250 1878 83	9090 2100 01	-
LZB33, LZB34	9090 0508 00	-	9090 2100 01	-
LZB42-L	9090 0510 00	-	9090 2100 01	0803 5011 07
LZB46-L	9090 0510 00	-	9090 2100 01	0803 5011 07
LZB54-L	9090 0510 00	-	9090 2100 01	0803 5011 07
LZB66-L	-	-	9090 2100 02	-
LZB77-L	-	Build in silencer	-	-
LZL03	-	-	9090 2100 01	0803 5011 06
LZL05	-	-	9090 2100 02	0803 5011 07
Noise damp dB(A)	15	20	25	15
Power loss %	10	10	7	10

NOTE: The noise damping and power loss values are approximate. The ECSB-2 silencer –01 has 1/2"and the –02 has 1" threaded port. They need to be connected to the motor via tube or hose with suitable connections.

Different noise reduction possibilities and the effects thereof:

0.36 – kW motor No-load speed Anechoic room Interval of 1 m	Measure	Noise level dB(A)
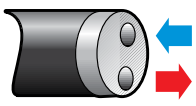	None	94
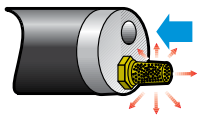	Silencer only	77
	Hose only	84
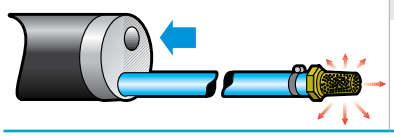	Hose with silencer	75

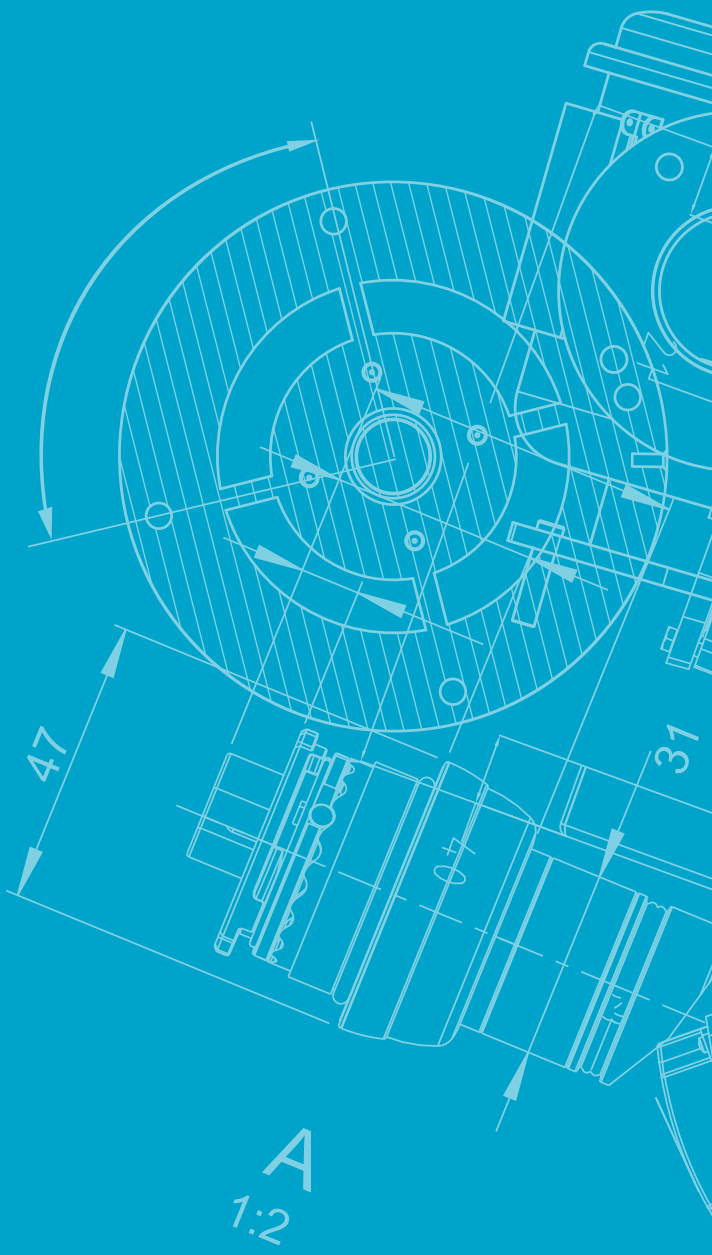
47
31
A
1:2

2 LZL

VANE MOTORS



LZL vane motors

1.05 – 6.5 kW
1.4 – 8.7 hp



Power motors (P)

The power motors come in all five sizes and are designed to give highest power and still maintain good low speed characteristics. These motors are delivered with lube free vanes and can theretofore operate without lubrication.

Typically these motors are characterized by:

- Reliable starting
- High starting torque and good low speed characteristics
- Wide speed and torque range
- Sturdy, compact construction to withstand rough treatment
- Inlet and outlet port restrictors permit free speed running.
- Long working life and easy servicing

EX certification valid for fixture mounted use only with a maximum surrounding temperature of +40°C (104°F).

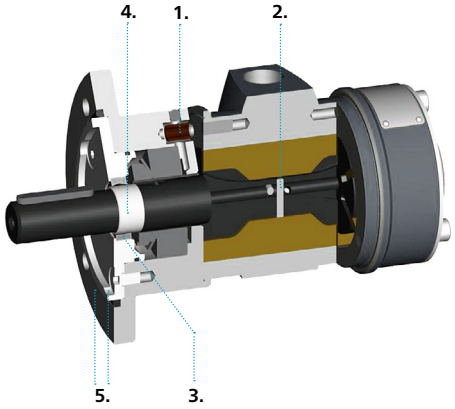

1. Rubber hose valves for venting bearing and seals.
2. Vane pins.
3. Double seals.
4. Stainless steel bushing.
5. Aluminum front with stainless steel screws.

Data at air pressure 6.3 bar (91 psi)

Model Lubrication free	Max output		Speed at max output	Torque at max output		Min starting torque		Stall torque		Free speed	Max alloweed speed	Air consumption at max output		Weight		ATEX code**	Ordering No.
	kW	hp	r/min	Nm	lb-ft	Nm	lb-ft	Nm	lb-ft	r/min	r/min	l/s	cfm	kg	lb		
LZL03-L-P-AC	1.05	1.4	5300	1.9	1.4	2.8	2.1	3.8	2.8	11000		29	61	2.9	6.4	Ex II 2GD h T6 IIC T85°C X	8411 1009 70
LZL03-L-P-IEC	1.05	1.4	5300	1.9	1.4	2.8	2.1	3.8	2.8	11000		29	61	3.9	8.6	Ex II 2GD h T6 IIC T85°C X	8411 1009 88
LZL03-L-P-NEMA	1.05	1.4	5300	1.9	1.4	2.8	2.1	3.8	2.8	11000		29	61	3.8	8.4	Ex II 2GD h T6 IIC T85°C X	8411 1009 96
Unrestricted*	1.7	2.5	7500	2.2	1.6	2.8	2.1	3.8	2.8		11000	45	95				
LZL05-L-P-AC	1.3	1.7	4300	2.9	2.1	4.8	3.5	5.8	4.3	9000		37	78	3.9	8.6	Ex II 2GD h T6 IIC T85°C X	8411 1010 30
LZL05-L-P-IEC	1.3	1.7	4300	2.9	2.1	4.8	3.5	5.8	4.3	9000		37	78	4.8	10.6	Ex II 2GD h T6 IIC T85°C X	8411 1010 48
LZL05-L-P-NEMA	1.3	1.7	4300	2.9	2.1	4.8	3.5	5.8	4.3	9000		37	78	4.9	10.8	Ex II 2GD h T6 IIC T85°C X	8411 1010 55
LZL05-L-P-HUB	1.3	1.7	4300	2.9	2.1	4.8	3.5	5.8	4.3	9000		37	78	3.8	8.4	Ex II 2GD h T6 IIC T85°C X	8411 1011 50
Unrestricted*	2.1	2.8	6300	3.1	2.3	4.8	3.5	5.8	4.3		9200	50	106				
LZL15-L-P-AC	2.3	3.1	3380	6.5	4.8	10.9	8.0	13	9.6	7000		61	129	7.1	15.7	Ex II 2GD h T6 IIC T85°C X	8411 1011 19
LZL15-L-P-IEC	2.3	3.1	3380	6.5	4.8	10.9	8.0	13	9.6	7000		61	129	8.3	18.3	Ex II 2GD h T6 IIC T85°C X	8411 1011 68
LZL15-L-P-NEMA	2.4	3.2	3381	6.6	4.9	10.10	8.1	14	9.7	7000		61	129	8.3	18.3	Ex II 2GD h T6 IIC T85°C X	8411 1011 92
Unrestricted*	3.2	4.3	4500	6.8	5.0	10.9	8.0	13	9.6		7200	87	184				
LZL25-L-P-AC	3.4	4.6	2800	11.6	8.5	18	13.2	23	17	5800		86	182	11.3	24.9	Ex II 2GD h T6 IIC T85°C X	8411 1011 27
LZL25-L-P-IEC	3.4	4.6	2800	11.6	8.5	18	13.2	23	17	5800		86	182	15.2	33.5	Ex II 2GD h T6 IIC T85°C X	8411 1011 76
Unrestricted*	5.0	6.7	4000	12.0	8.8	18	13.2	23	17		6000	135	286				
LZL35-L-P-AC	5.2	7.0	2500	20	14.7	32	23.6	40	30	5000		130	275	20	44.1	Ex II 2GD h T6 IIC T85°C X	8411 1011 35
LZL35-L-P-IEC	5.2	7.0	2500	20	14.7	32	23.6	40	30	5000		13	275	20	44.1	Ex II 2GD h T6 IIC T85°C X	8411 1011 84
Unrestricted*	6.5	8.7	3100	20	14.7	32	23.6	40	30		5000	160	339				

** Motors without restrictor plates in the air in- and outlet, the motor should not be run above max allowed speed.*
*** Max allowed speed for the specified ATEX code is 5000 rpm.*

Low to medium speed motors (M)

These motors are, among other applications, ideal for mixing.

To further ensure a clean and hygienic environment, a double shaft seal is used and all components that come in contact with the mixed medium are made of corrosion-resistant material. Thanks to the cylinder design and highly stable bearings, LZL motors require no extra drive shaft support and are ready for mounting without add-ons. For good adaptability, the motors are available with AC, IEC or NEMA.

EX certification valid for fixture mounted use only with a maximum surrounding temperature of +40°C (104°F).

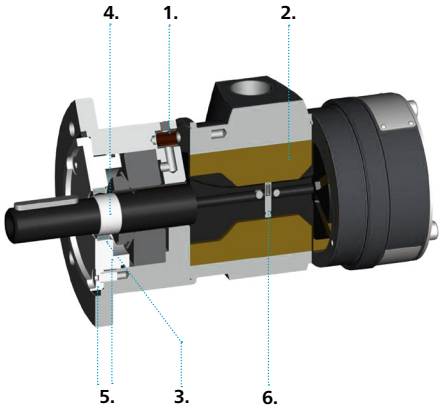

1. Rubber hose valves for venting bearing and seals.
2. Lube free vanes.
3. Double seals.
4. Stainless steel bushing.
5. Aluminum front with stainless steel screws.
6. Spring loaded pins.

Model Lubrication free	Power at 3000 rpm		Torque at 3000 rpm		Stall torque		Max allowed speed	Air consumption at 3000 rpm		Weight		ATEX code	Ordering No.
	kW	hp	Nm	lb-ft	Nm	lb-ft	r/min	l/s	cfm	kg	lb		
LZL03-L-M-AC	0.41	0.55	1.3	0.95	3.3	2.4	3000	16	34	2.9	6.4	Ex II 2GD h T6 IIC T85°C X	8411 1010 06
LZL03-L-M-IEC	0.41	0.55	1.3	0.95	3.3	2.4	3000	16	34	3.8	8.4	Ex II 2GD h T6 IIC T85°C X	8411 1010 14
LZL03-L-M-NEMA	0.41	0.55	1.3	0.95	3.3	2.4	3000	16	34	3.9	8.6	Ex II 2GD h T6 IIC T85°C X	8411 1010 22
Unrestricted*	1.0	1.3	3.3	2.4	3.8	2.8	3000	24	51				
LZL05-L-M-AC	0.63	0.84	2.0	1.5	5.8	4.3	3000	25	52	3.9	8.6	Ex II 2GD h T6 IIC T85°C X	8411 1010 63
LZL05-L-M-IEC	0.63	0.84	2.0	1.5	5.8	4.3	3000	25	52	4.8	10.6	Ex II 2GD h T6 IIC T85°C X	8411 1010 71
LZL05-L-M-NEMA	0.63	0.84	2.0	1.5	5.8	4.3	3000	25	52	4.9	10.8	Ex II 2GD h T6 IIC T85°C X	8411 1010 89
Unrestricted*	1.7	2.2	5.3	3.9	5.8	4.3	3000	35	74				

** Motor without restrictor plates in the air in- and outlet, the motors should not be run above max allowed speed.*

Stainless steel motors

Stainless steel motors are available in the size LZL05. They are lube free and have the same features as the other lube free motors. All external parts, including the output shaft, are made of stainless steel, which makes the motors very corrosion resistant and ideal for applications such as the food industry, corrosive mixing and the chemical industry.

The material used in all external parts is ISO 683/XIII Type 17, SS 14 2346, DIN 17440 X 12CrNiS188.

The material in the output shaft is ISO 683/XIII Type 9b, SS 14 2321, DIN 17440 X 22CrNi17.

EX certification valid for fixture mounted use only with a maximum surrounding temperature of +40°C (104°F).

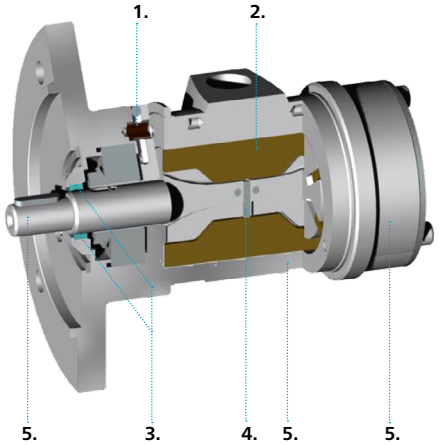

1. Rubber hose valves for venting bearing and seals.
2. Lube free vanes.
3. Double seals.
4. Vane pins.
5. Stainless steel.

Model Lubrication free	Power at 3000 rpm		Torque at 3000 rpm		Stall torque		Max allowed speed	Air consumption at 3000 rpm		Weight		ATEX code	Ordering No.
	kW	hp	Nm	lb-ft	Nm	lb-ft	r/min	l/s	cfm	kg	lb		
LZL05-RL-P-IEC	0.63	0.84	2.0	1.5	5.8	4.3	3000	25	52	6.1	13.4	Ex II 2GD h T4 IIC T110°C	8411 1010 97
LZL05-RL-P-NEMA	0.63	0.84	2.0	1.5	5.8	4.3	3000	25	52	6.1	13.4	Ex II 2GD h T4 IIC T110°C	8411 1011 01
Unrestricted*	1.7	2.2	5.3	3.9	5.8	4.3	3000	35	74				

** Motor without restrictor plates in the air in- and outlet, the motors should not be run above max allowed speed.*

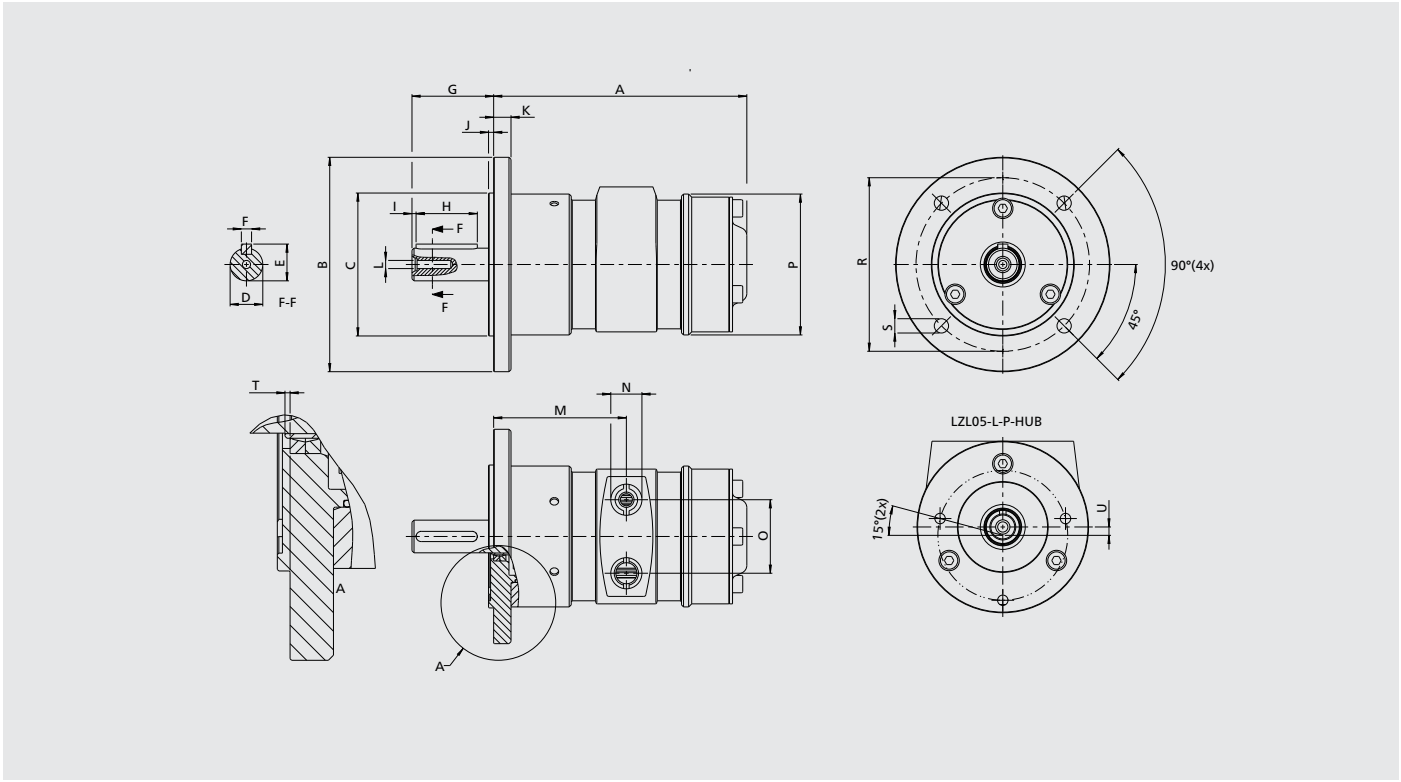

Model		A	B	C	D	E	F	G	H	I	J	K	L	M	N	O	P	R	S	T	U
LZL03-L-M/P-AC	mm	124	Ø105	Ø70 j6	Ø16 j7	18	5 h9	40	30	2.0	2.5	8.5	M5x15	65	BSP ⅜"	36	Ø69	Ø85	Ø7	1	-
LZL03-L-M/P-IEC	mm	124	Ø160	Ø110 j6	Ø14 j7	16	5 h9	30	20	2.0	3.5	8.5	M5x15	65	BSP ⅜"	36	Ø69	Ø130	Ø10	-	-
LZL03-L-M/P-NEMA	mm	124	Ø165.1	Ø114.3	Ø15.875	17.85	4.75	51.5	31.75	1.7	3.175	10	M5x15	65	BSP ⅜"	36	Ø69	Ø149.225	⅜"-16 UNC	1	-
LZL03-L-M/P-NEMA	inch	4.88	Ø6.5	Ø4.5	Ø0.625	0.703	0.187	2.03	1.25	0.07	0.125	0.39	M5x15	2.56	BSP ⅜"	1.42	Ø2.72	Ø5.875	⅜"-16 UNC	0.04	-
LZL05-L-P-AC	mm	152	Ø105	Ø70 j6	Ø18 j7	20.5	6 h9	40	30	3.0	2.5	8.5	M5x15	81	BSP ½"	44	Ø76	Ø85	Ø7	-	-
LZL05-L-M-AC	mm	152	Ø105	Ø70 j6	Ø16 j7	18	5 h9	40	30	2.0	2.5	8.5	M5x15	81	BSP ½"	44	Ø76	Ø85	Ø7	0.5	-
LZL05-L-M/P-IEC	mm	152	Ø160	Ø110 j6	Ø14 j7	16	5 h9	30	20	2.0	3.5	8.5	M5x15	81	BSP ½"	44	Ø76	Ø130	Ø10	-	-
LZL05-L-M/P-NEMA	mm	152	Ø165.1	Ø114.3	Ø15.875	17.85	4.75	51.5	31.75	1	3.175	10	M5x15	81	BSP ½"	44	Ø76	Ø149.225	⅜"-16 UNC	0.5	-
LZL05-L-M/P-NEMA	inch	5.98	Ø6.5	Ø4.5	Ø0.625	0.703	0.187	2.03	1.25	0.04	0.125	0.39	M5x15	3.19	BSP ½"	1.73	Ø3	Ø5.875	⅜"-16 UNC	0.02	-
LZL05-L-P-HUB	mm	152	Ø84	Ø44.45 j6	Ø12.7	14.51	3.175 H7	45	12.3	6.8	16	8.5	-	81	BSP ½"	44	Ø76	Ø63.6	¼"-20 UNC	15.5	4.1
LZL05-L-P-HUB	inch	5.98	Ø3.31	Ø1.75	Ø0.5	0.57	0.125	1.77	0.5	0.3	0.63	0.335	-	3.19	BSP ½"	1.73	Ø3	Ø2.5	¼"-20 UNC	0.61	0.161
LZL05-RL-P-IEC	mm	152	Ø160	Ø110 j6	Ø14 j7	16	5 h9	30	20	2.0	3.5	8.5	M5x15	81	BSP ½"	44	Ø76	Ø130	Ø10	-	-
LZL05-RL-P-NEMA	mm	152	Ø165.1	Ø114.3	Ø15.875	17.85	4.75	51.5	31.75	1	3.175	10	M5x15	81	BSP ½"	44	Ø76	Ø149.225	⅜"-16 UNC	0.5	-
LZL05-RL-P-NEMA	inch	5.98	Ø6.5	Ø4.5	Ø0.625	0.703	0.187	2.03	1.25	0.04	0.125	0.39	M5x15	3.19	BSP ½"	1.73	Ø3	Ø5.875	⅜"-16 UNC	0.02	-
LZL15-L-P-AC	mm	181.5	Ø140	Ø95 j6	Ø22 j7	24.5	6 h9	52.5	40	5.0	3.0	12	M6x16	95	BSP ¾"	54	Ø100	Ø115	Ø9	-	-
LZL15-L-P-IEC	mm	181.5	Ø200	Ø130 j6	Ø19 j6	21.5	6 h9	40.5	30	5.0	3.5	12	M6x16	95	BSP ¾"	54	Ø100	Ø165	Ø12	-	-
LZL15-L-P-NEMA	mm	181.5	Ø165.1	Ø114.3	Ø15.875	17.85	4.75	51.5	31.75	1.5	3.175	12	M6x16	95	BSP ¾"	54	Ø100	Ø149.225	⅜"-16 UNC	-	-
LZL15-L-P-NEMA	inch	7.15	Ø6.5	Ø4.5	Ø0.625	0.703	0.187	2.03	1.25	0.06	0.125	0.472	M6x16	3.74	BSP ¾"	2.13	Ø3.94	Ø5.875	⅜"-16 UNC	-	-
LZL25-L-P-AC	mm	221	Ø160	Ø110 j6	Ø28 j7	31	8 h7	62.5	50	5.0	3	12	M10x22	118	BSP 1"	70	Ø120	Ø130	Ø10	-	-
LZL25-L-P-IEC	mm	221	Ø200	Ø130 j6	Ø24 j6	27	8 h7	49.5	40	5.0	3.5	12	M10x22	118	BSP 1"	70	Ø120	Ø165	Ø12	-	-
LZL35-L-P-AC	mm	248.5	Ø200	Ø130 j6	Ø28 j7	31	8 h7	60	50	5.0	3.5	14	M10x22	129	BSP 1¼"	70	Ø134	Ø165	Ø12	-	-
LZL35-L-P-IEC	mm	248.5	Ø250	Ø180 j6	Ø28 j6	31	8 h7	60	50	5.0	4.0	14	M10x22	129	BSP 1¼"	70	Ø134	Ø215	Ø14.5	-	-

LZL motors with IEC interface

Model	Flange mounting	IEC frame	Flange No.
LZL03-L-M/P-IEC	B5	71	FF 130
LZL05-L-M/P-IEC	B5	71	FF 130
LZL05-RL-M/P-IEC	B5	71	FF 130
LZL15-L-P-IEC	B5	80	FF 165
LZL25-L-P-IEC	B5	80	FF 165
LZL35-L-P-IEC	B5	100	FF 215

LZL: Performance curves at air pressure 6.3 bar (91 psi)

Power motors

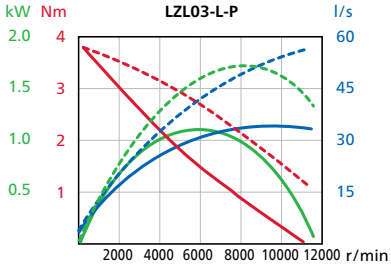

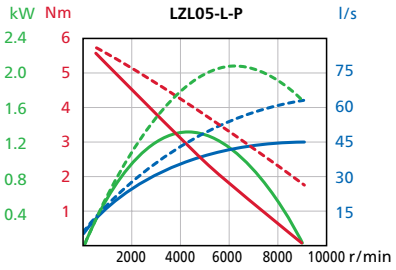

The solid lines represent restricted motors and the dotted lines unrestricted motors.

The restricted motors are guaranteed not to exceed the ATEX speed limit when running at 6.3 bar or below.

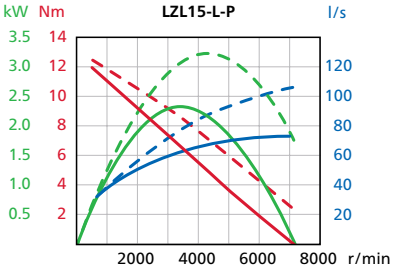

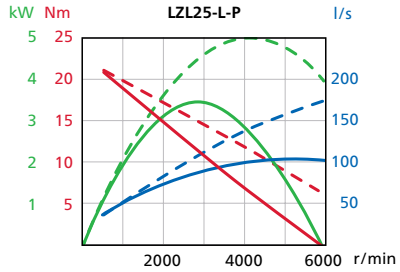

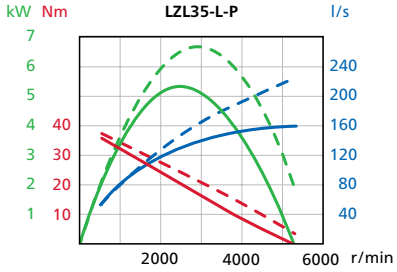

LZL: Performance curves at air pressure 6.3 bar (91 psi)

Low to medium speed

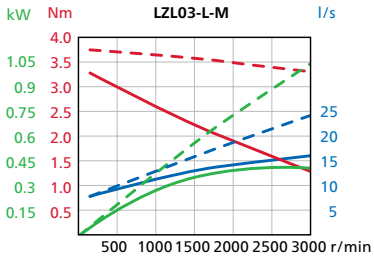

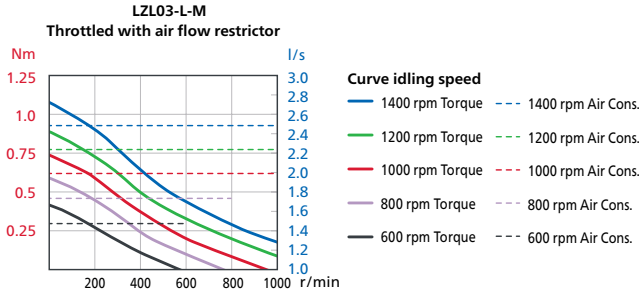

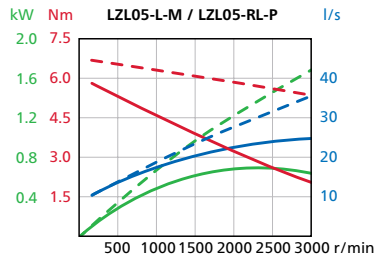

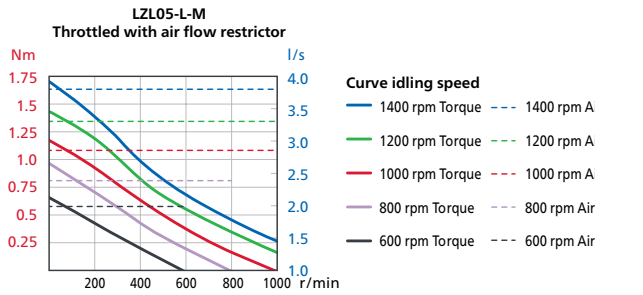

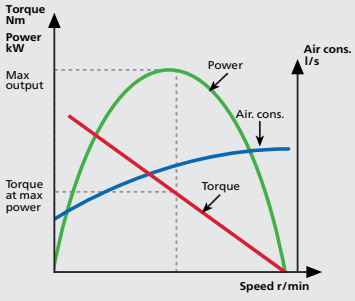

Conversion factors

1 kW	= 1.34 hp
1 Nm	= 0.74 lbf - ft
1 l/s	= 2.1 cfm
1 hp	= 0.75 kW
1 lbf-ft	= 1.36 Nm
1 cfm	= 0.47 l/s

Performance with restrictors

Performance without restrictors, (unrestricted)

For information about performance curves, see page 6.

LZL vane motor
gear unit combinations

Combined with helical gear units, LZL vane motors can be used over a very wide torque and speed range. Gears have a ratio range between 6.3:1 to 164.5:1, corresponding to a speed range of 512 to 17 r/min and output torque up to 1836 Nm at max. output.

Helical gear units, type BF

Helical gear units are available in 2, 3, or 4-stage configurations. They deliver high efficiency levels and are available in a wide choice of ratios, Figure 4.

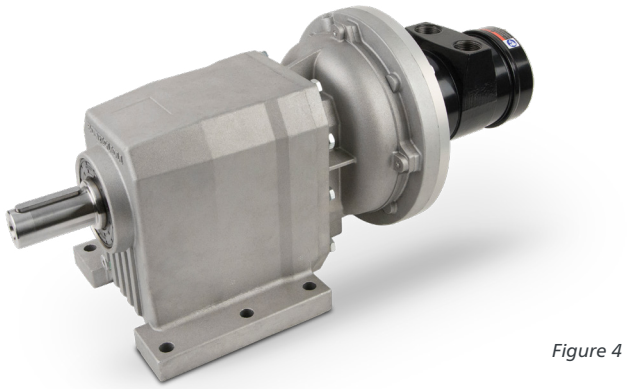

Figure 4

Shaft loading

The maximum allowable radial load on the output shaft of each gear unit, at the halfway point on the shaft can be obtained from the data tables for each model.

The maximum permitted axial load is 20% of the table value for radial load if full permitted radial load is occurring. If there is no radial load the maximum permissible axial load is 50% of the table value for radial force.

Calculating sprocket or gearwheel dimensions

If it is intended to fit a sprocket, gearwheel or pulley onto the output shaft, the radial load generated when running must be within the permitted level.

The following formula is used to calculate the minimum diameter of these components, to ensure the radial load does not exceed this limit.

$$D_{min} = \frac{2 \times M \times kt}{F} \text{ [m]}$$

where M = load torque in Nm
F = permitted radial force halfway along the shaft extension
kt = 1.0 for sprocket
1.3 for gear wheel
1.5 for pulley

Operating speed

To avoid damage to seals the gear units should not be run continuously above 4200 rpm.

Mounting

There are two options of mounting arrangement: Foot or Flange as illustrated in Figure 5.

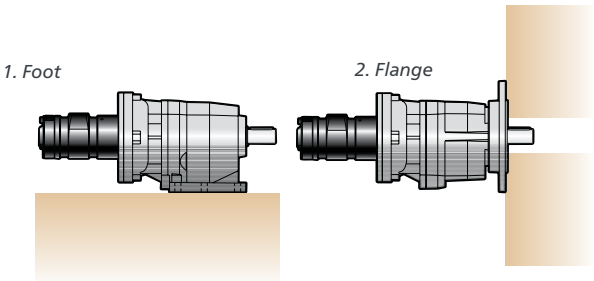

Figure 5

Temperature

The gear units can operate within an ambient temperature range of –20°C (–4°F) and +40°C (104°F).

If it is required to use a gear unit outside these temperature limits please consult your local Atlas Copco representative.

Mounting position

Allowed mounting positions are shown below. Installing the motor underneath the gear unit is not allowed.

The alphanumeric numbers B3, B5, etc., are referred to in the product information enclosed at delivery.

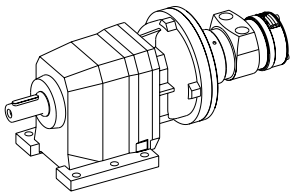

B3

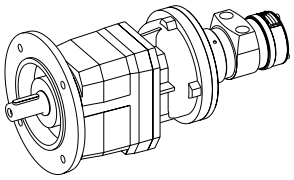

B5

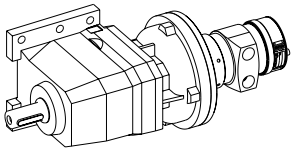

B6

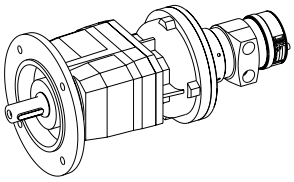

B51

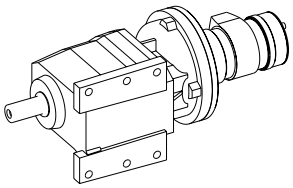

B7

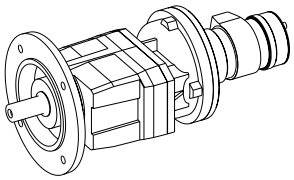

B53

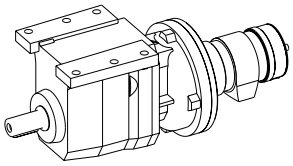

B8

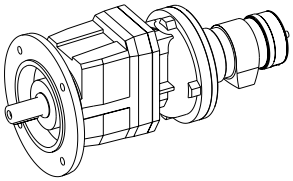

B52

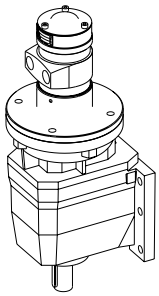

V5

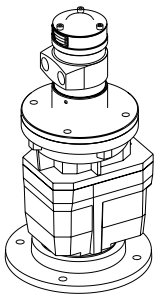

V1

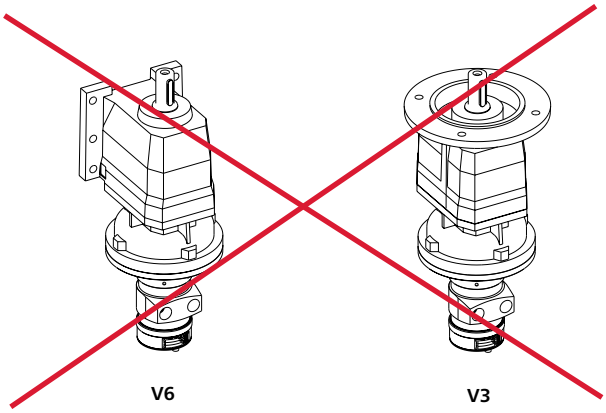

V6

V3

NOTE: For some positions additional oil needs to be added to the gear box, see service instructions for details

Air motors **LZL05**

with helical gear units

1.2 – 2.0 kW
1.7 – 2.6 hp

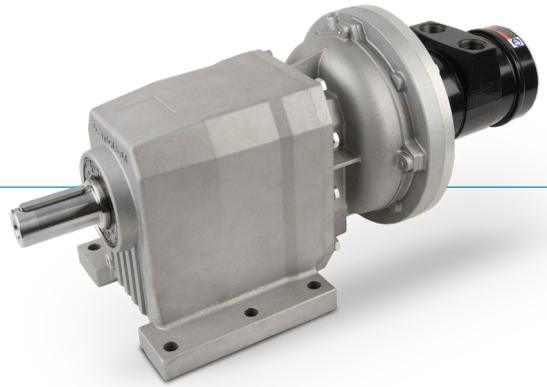

The LZL motor connects to the helical gear through an IEC interface

Data at air pressure 6.3 bar (91 psi)

Model	Ratio	Max output		Speed at max output	Torque max output		Min starting torque		Free speed	Max allowed speed	Air consumption at max output		Weight		Max radial load at max output	Ordering No.
		kW	hp	r/min	Nm	lb-ft	Nm	lb-ft	r/min	r/min	l/s	cfm	kg	lb	N	
LZL05-BF322-A-012	12.3	1.2	1.7	352	33	25	56	41	740		36	77	14	31	2360	8411 1808 40
LZL05-BF322-B-012	12.3	1.2	1.7	352	33	25	56	41	740		36	77	14	31	2360	8411 1808 57
Unrestricted*	12.3	2.0	2.6	512	36	27	56	41		740	54	114	14	31	2100	
LZL05-BF322-A-018	18.2	1.2	1.7	238	49	36	83	61	500		36	77	14	31	2770	8411 1808 65
LZL05-BF322-B-018	18.2	1.2	1.7	238	49	36	83	61	500		36	77	14	31	2770	8411 1808 73
Unrestricted*	18.2	2.0	2.6	346	54	40	83	61		500	54	114	14	31	2450	
LZL05-BF322-A-033	33.1	1.2	1.7	131	90	66	151	111	275		36	77	14	31	3370	8411 1808 81
LZL05-BF322-B-033	33.1	1.2	1.7	131	90	66	151	111	275		36	77	14	31	3370	8411 1808 99
Unrestricted*	33.1	2.0	2.6	190	97	72	151	111		275	54	114	14	31	3000	
LZL05-BF322-A-060	59.4	1.2	1.7	73	161	119	271	200	153		36	77	14	31	4800	8411 1809 07
LZL05-BF322-B-060	59.4	1.2	1.7	73	161	119	271	200	153		36	77	14	31	4800	8411 1810 15
Unrestricted*	59.4	2.0	2.6	106	174.9	129	271	200		153	54	114	14	31	4280	
LZL05-BF363-A-102	102.2	1.2	1.6	42	272	200	456	336	89		36	77	22	49	5650	8411 1810 23
LZL05-BF363-B-102	102.2	1.2	1.6	42	272	200	456	336	89		36	77	22	49	5650	8411 1810 31
Unrestricted*	102.2	1.9	2.6	62	295	217	456	336		89	54	114	22	49	5020	
LZL05-BF363-A-140	139.8	1.2	1.6	31	372	274	624	460	65		36	77	22	49	5690	8411 1810 49
LZL05-BF363-B-140	139.8	1.2	1.6	31	372	274	624	460	65		36	77	22	49	5690	8411 1810 56
Unrestricted*	139.8	1.9	2.6	45	403	297	624	460		65	54	114	22	49	5060	

**) Unrestricted, the motors should not be run without load*

A = Foot mount. B = Flange mount

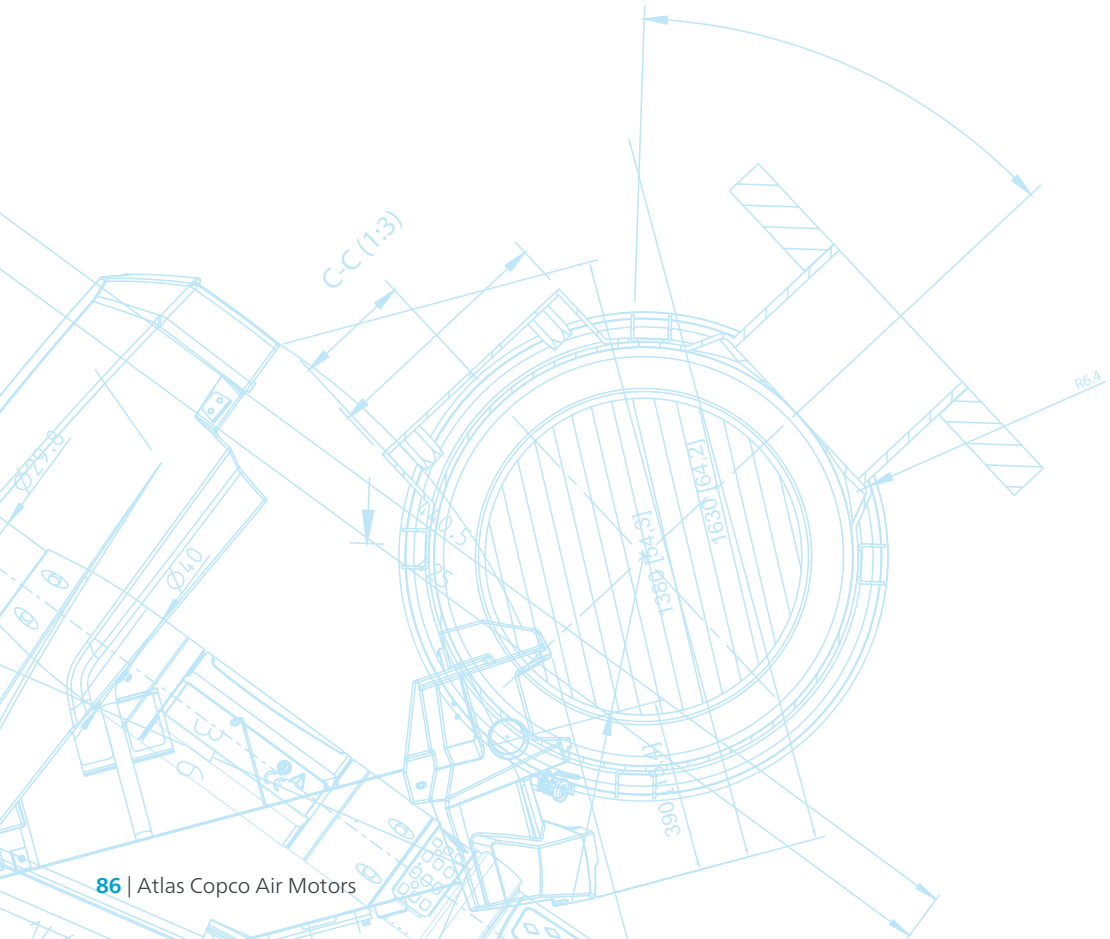

Air motor LZL05 with helical gear units type BF: Performance curves at air pressure 6.3 bar (91 psi)

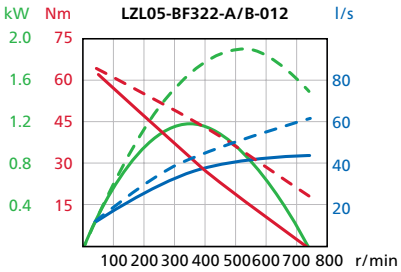

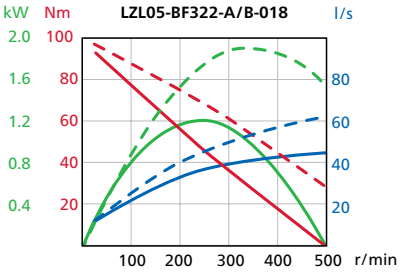

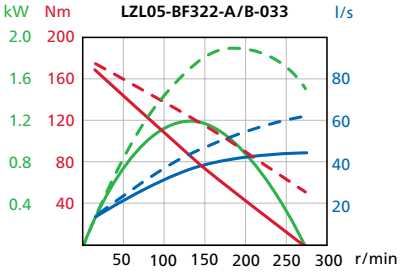

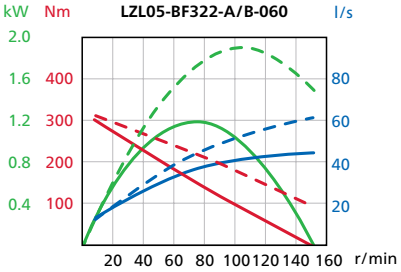

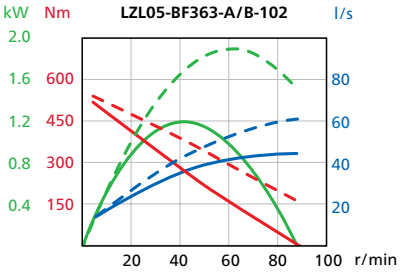

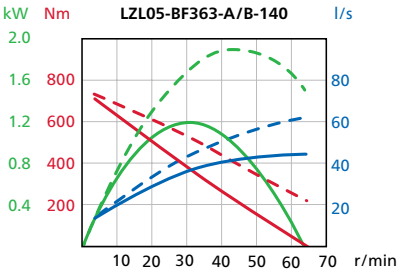

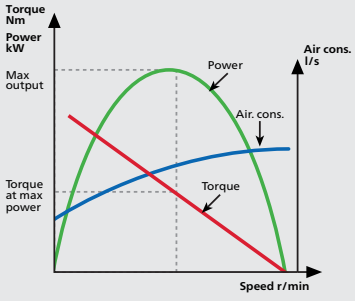

Conversion factors

1 kW	= 1.34 hp
1 Nm	= 0.74 lbf - ft
1 l/s	= 2.1 cfm
1 hp	= 0.75 kW
1 lbf-ft	= 1.36 Nm
1 cfm	= 0.47 l/s

Performance with restrictors

Performance without restrictors, (unrestricted)

For information about performance curves, see page 6.

Air motors **LZL15**

with helical gear units

2.1 – 3.0 kW
2.9 – 4.1 hp

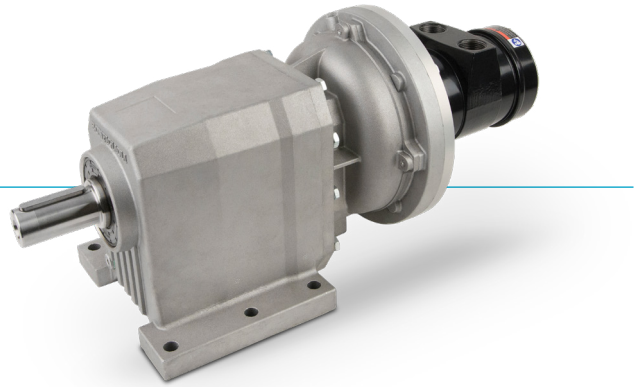

The LZL motor connects to the helical gear through an IEC interface

Data at air pressure 6.3 bar (91 psi)

Model	Ratio	Max output		Speed at max output	Torque max output		Min starting torque		Free speed	Max allowed speed	Air consumption at max output		Weight		Max radial load at max output	Ordering No.
		kW	hp	r/min	Nm	lb-ft	Nm	lb-ft	r/min	r/min	l/s	cfm	kg	lb	N	
LZL15-BF322-A-011	11.2	2.2	2.9	307	68	50	116	86	639		61	129	19	42	2530	8411 1810 61
LZL15BF322-B-011	11.2	2.2	2.9	307	68	50	116	86	639		61	129	19	42	2530	8411 1810 79
Unrestricted*	11.2	3.0	4.1	389	74	55	116	86		639	86	181	19	42	2310	
LZL15-BF322-A-018	18.2	2.2	2.9	189	111	82	188	139	393		61	129	19	42	2970	8411 1810 87
LZL15-BF322-B-018	18.2	2.2	2.9	189	111	82	188	139	393		61	129	19	42	2970	8411 1810 95
Unrestricted*	18.2	3.0	4.1	239	121	89.3	188	139		393	86	181	19	42	2710	
LZL15-BF322-A-033	33.1	2.2	2.9	104	202	149	343	253	216		61	129	19	42	3600	8411 1811 03
LZL15-BF322-B-033	33.1	2.2	2.9	104	202	149	343	253	216		61	129	19	42	3600	8411 1811 11
Unrestricted*	33.1	3.0	4.1	132	220	162	343	253		216	86	181	19	42	3300	
LZL15-BF322-A-060	59.4	2.2	2.9	58	362	267	615	454	120		61	129	19	42	5150	8411 1811 29
LZL15-BF322-B-060	59.4	2.2	2.9	58	362	267	615	454	120		61	129	19	42	5150	8411 1811 37
Unrestricted*	59.4	3.0	4.1	73	395	291	615	454		120	86	181	19	42	4710	
LZL15-BF363-A-102	102.2	2.1	2.9	34	609	449	1036	764	70		61	129	27	60	6040	8411 1811 45
LZL15-BF363-B-102	102.2	2.1	2.9	34	609	449	1036	764	70		61	129	27	60	6040	8411 1811 52
Unrestricted*	102.2	3.0	4.0	43	665	491	1036	764		70	86	181	27	60	5520	
LZL15-BF613-A-165	164.5	2.1	2.9	21	981	723	1668	1230	43		61	129	70	154	15000	8411 1811 60
LZL15-BF613-B-165	164.5	2.1	2.9	21	981	723	1668	1230	43		61	129	70	154	15000	8411 1811 78
Unrestricted*	164.5	3.0	4.0	26	1071	790	1668	1230		43	86	181	70	154	15000	

**) Unrestricted, the motors should not be run without load*

A = Foot mount. B = Flange mount

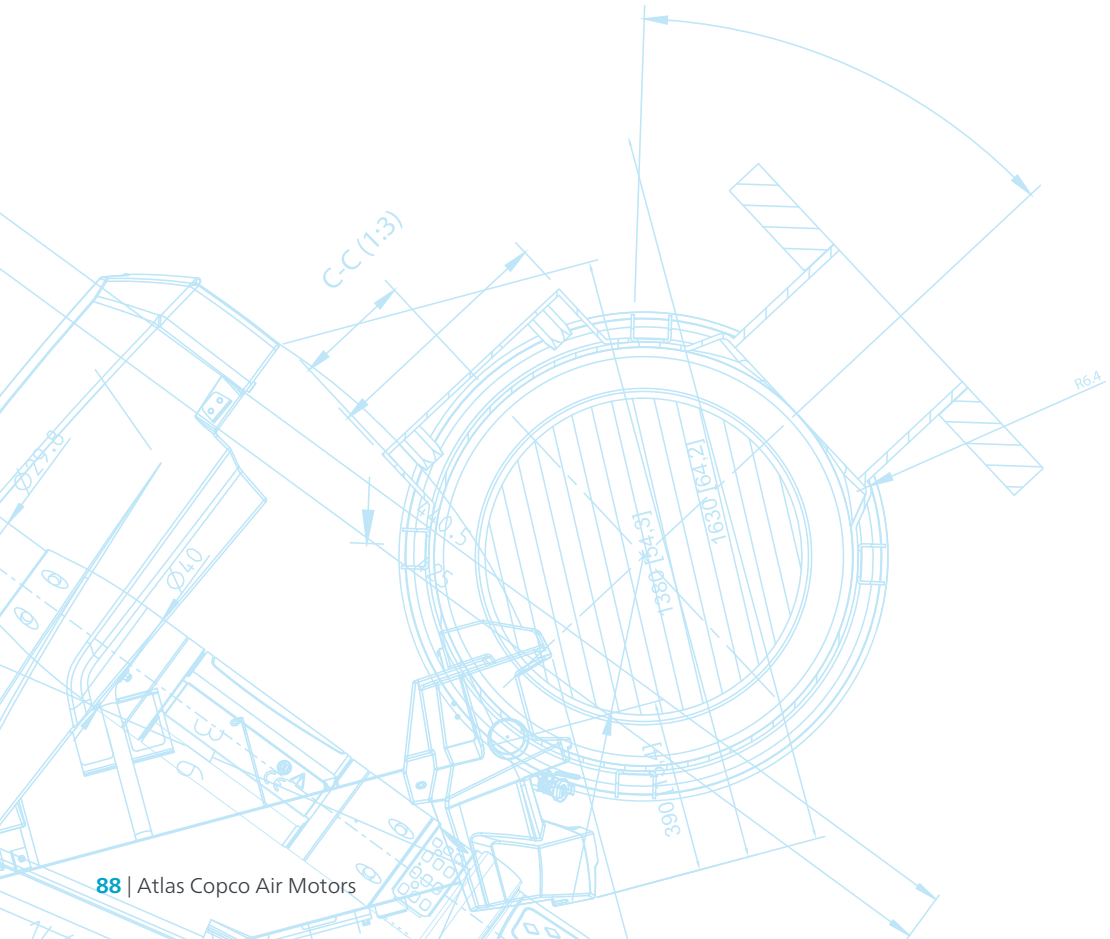

Air motor LZL15 with helical gear units type BF: Performance curves at air pressure 6.3 bar (91 psi)

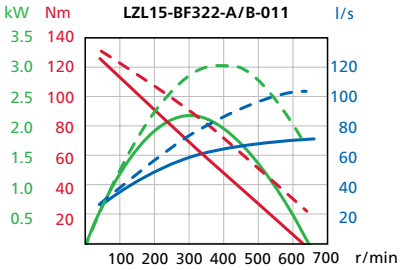

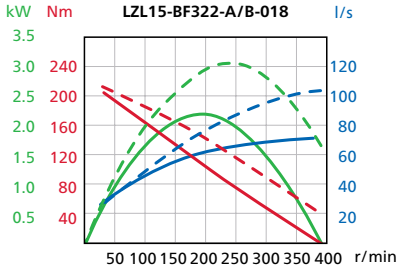

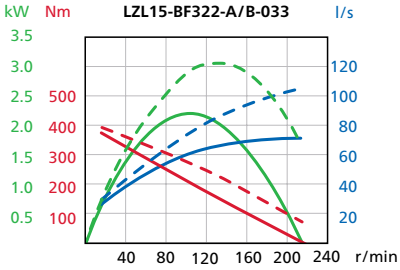

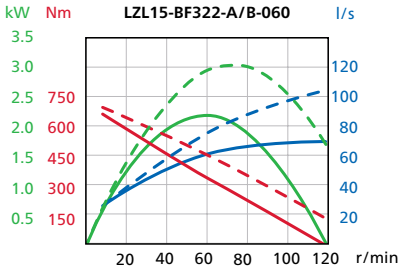

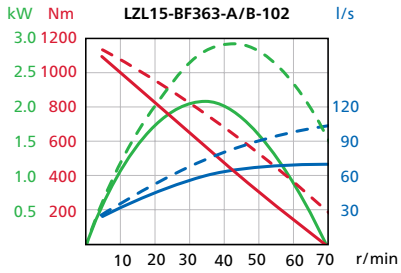

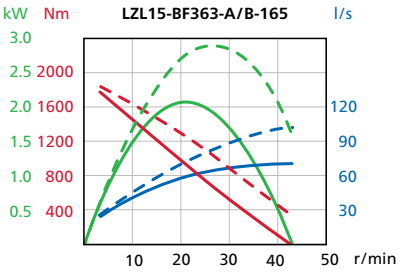

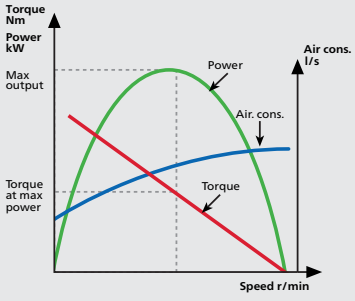

Conversion factors

1 kW	= 1.34 hp
1 Nm	= 0.74 lbf - ft
1 l/s	= 2.1 cfm
1 hp	= 0.75 kW
1 lbf-ft	= 1.36 Nm
1 cfm	= 0.47 l/s

Performance with restrictors

Performance without restrictors, (unrestricted)

For information about performance curves, see page 6.

Air motors **LZL25**

with helical gear units

3.3 – 4.8 kW
4.4 – 6.4 hp

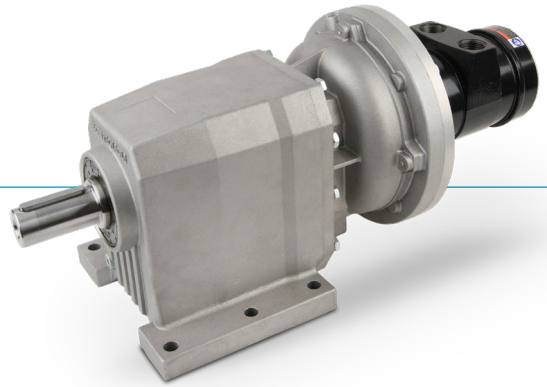

The LZL motor connects to the helical gear through an IEC interface

Data at air pressure 6.3 bar (91 psi)

Model	Ratio	Max output		Speed at max output	Torque max output		Min starting torque		Free speed	Max allowed speed	Air consumption at max output		Weight		Max radial load at max output	Ordering No.
		kW	hp	r/min	Nm	lb-ft	Nm	lb-ft	r/min	r/min	l/s	cfm	kg	lb	N	
LZL25-BF322-A-011	11.2	3.3	4.4	254	123	91	192	141	531		86	183	26	57	2700	8411 1811 86
LZL25-BF322-B-011	11.2	3.3	4.4	254	123	91	192	141	531		86	183	26	57	2700	8411 1811 94
Unrestricted*	11.2	4.8	6.4	370	128	94	192	141		531	140	297	26	57	2430	
LZL25-BF322-A-018	18.2	3.3	4.4	156	201	148	311	230	327		86	183	26	57	3170	8411 1812 02
LZL25-BF322-B-018	18.2	3.3	4.4	156	201	148	311	230	327		86	183	26	57	3170	8411 1812 10
Unrestricted*	18.2	4.8	6.4	227	207	153	311	230		327	140	297	26	57	2860	
LZL25-BF363-A-035	34.6	3.2	4.3	82	373	275	579	427	172		86	183	34	75	4100	8411 1812 28
LZL25-BF363-B-035	34.6	3.2	4.3	82	373	275	579	427	172		86	183	34	75	4100	8411 1812 36
Unrestricted*	34.6	4.7	6.2	120	386	285	579	427		172	140	297	34	75	3700	
L25-BF613-A-059	58.6	3.2	4.3	48	632	466	981	724	101		86	183	77	170	13000	8411 1812 44
LZL25-BF613-B-059	58.6	3.2	4.3	48	632	466	981	724	101		86	183	77	170	13000	8411 1812 51
Unrestricted*	58.6	4.7	6.2	71	654	482	981	724		101	140	297	77	170	11700	
LZL25-BF613-A-114	113.6	3.2	4.3	25	1226	904	1902	1403	52		86	183	77	170	16000	8411 1812 69
LZL25-BF613-B-114	113.6	3.2	4.3	25	1226	904	1902	1403	52		86	183	77	170	16000	8411 1812 77
Unrestricted*	113.6	4.7	6.2	36	1268	935	1902	1403		52	140	297	77	170	16000	
LZL25-BF613-A-165	164.5	3.2	4.3	17	1775	1309	2754	2031	36		86	183	77	170	16000	8411 1812 85
LZL25-BF613-B-165	164.5	3.2	4.3	17	1775	1309	2754	2031	36		86	183	77	170	16000	8411 1812 94
Unrestricted*	164.5	4.7	6.2	25	1836	1354	2754	2031		36	140	297	77	170	16000	

**) Unrestricted, the motors should not be run without load*

A = Foot mount. B = Flange mount

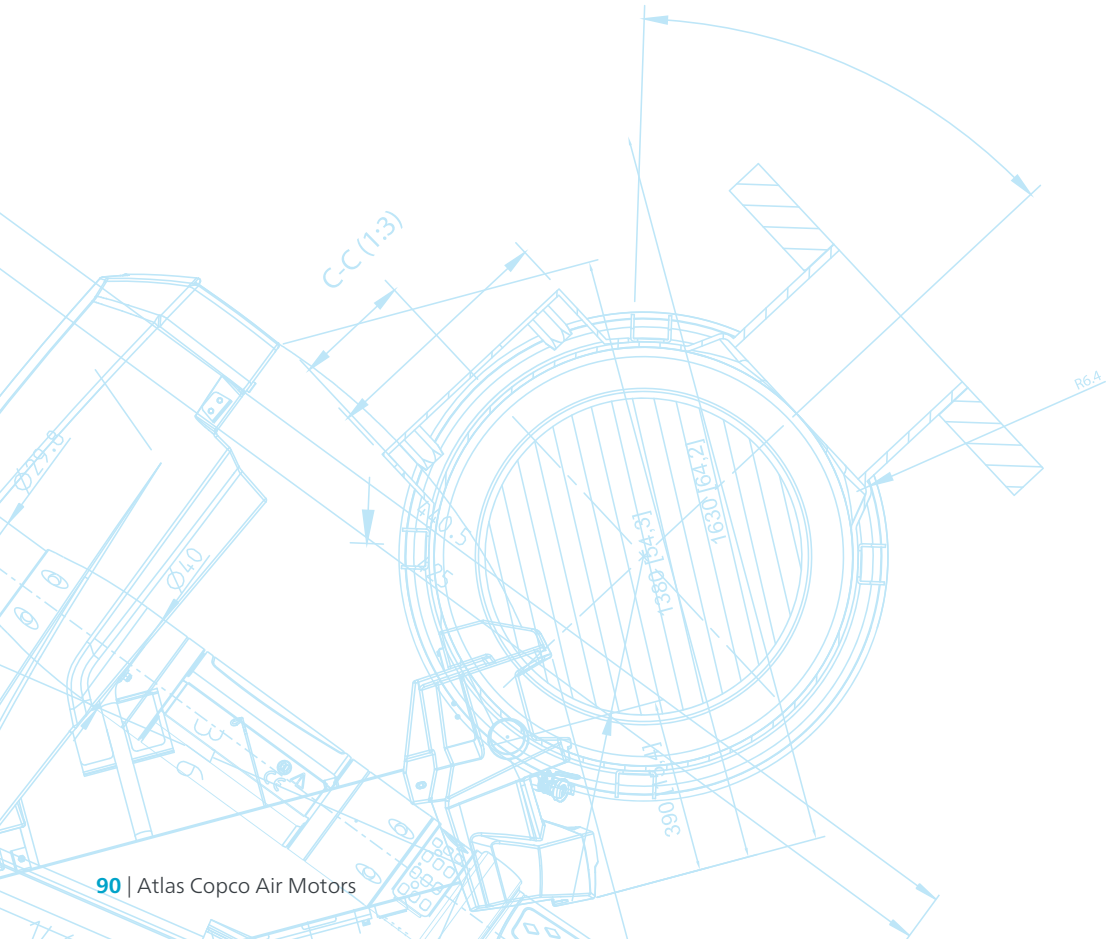

Air motor LZL25 with helical gear units type BF: Performance curves at air pressure 6.3 bar (91 psi)

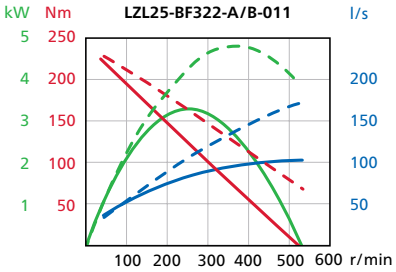

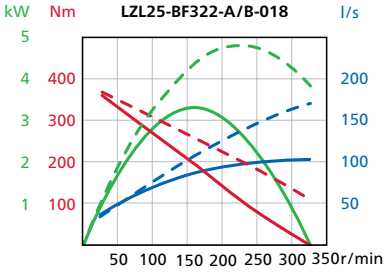

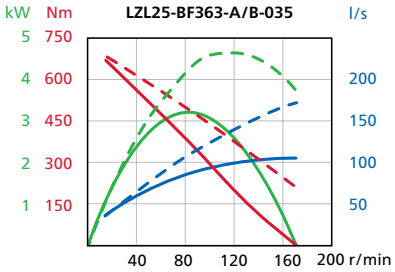

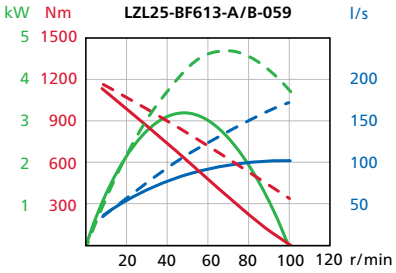

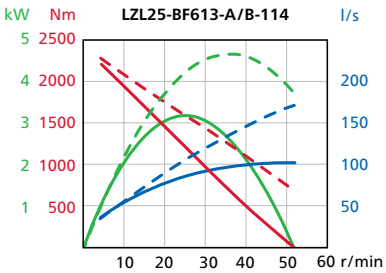

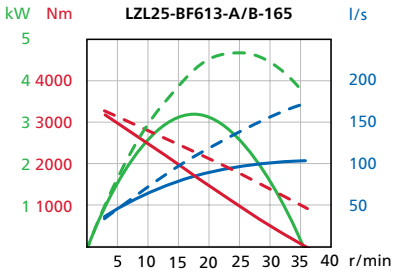

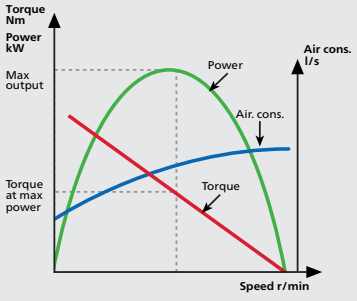

Conversion factors

1 kW	= 1.34 hp
1 Nm	= 0.74 lbf - ft
1 l/s	= 2.1 cfm
1 hp	= 0.75 kW
1 lbf-ft	= 1.36 Nm
1 cfm	= 0.47 l/s

Performance with restrictors

Performance without restrictors, (unrestricted)

For information about performance curves, see page 6.

Air motors **LZL35**

with helical gear units

5.1 – 6.3 kW
6.8 – 8.4 hp

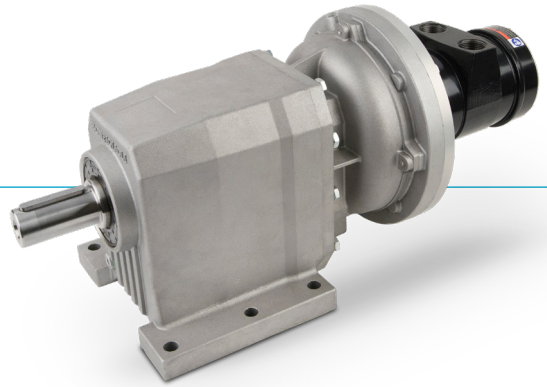

The LZL motor connects to the helical gear through an IEC interface

Data at air pressure 6.3 bar (91 psi)

Model	Ratio	Max output		Speed at max output	Torque max output		Min starting torque		Free speed	Max allowed speed	Air cons. at max output		Weight		Max radial load at max output	Ordering No.
		kW	hp	r/min	Nm	lb-ft	Nm	lb-ft	r/min	r/min	l/s	cfm	kg	lb	N	
LZL35-BF322-A-006	6.3	5.0	6.7	394	121	90	192	141	838		129	273	34	75	2360	8411 1813 01
LZL35-BF322-B-006	6.3	5.0	6.7	394	121	90	192	141	838		129	273	34	75	2360	8411 1813 19
Unrestricted*	6.3	6.2	8.3	464	128	94	192	141		838	159	337	34	75	2230	
LZL35-BF322-A-011	11.2	5.0	6.7	221	216	159	340	251	471		129	273	34	75	2810	8411 1813 27
LZL35-BF322-B-011	11.2	5.0	6.7	221	216	159	340	251	471		129	273	34	75	2810	8411 1813 35
Unrestricted*	11.2	6.2	8.3	261	227	167	340	251		471	159	337	34	75	2650	
LZL35-BF613-A-029	29.4	4.9	6.6	84	555	409	875	645	180		129	273	85	187	10600	8411 1813 43
LZL35-BF613-B-029	29.4	4.9	6.6	84	555	409	875	645	180		129	273	85	187	10600	8411 1813 50
Unrestricted*	29.4	6.1	8.1	99	583	430	875	645		180	159	337	85	187	10000	
LZL35-BF613-A-048	47.6	4.9	6.6	52	899	663	1417	1045	111		129	273	85	187	12100	8411 1813 68
LZL35-BF613-B-048	47.6	4.9	6.6	52	899	663	1417	1045	111		129	273	85	187	12100	8411 1813 78
Unrestricted*	47.6	6.1	8.1	61	944	696	1417	1045		111	159	337	85	187	11400	

**) Unrestricted, the motors should not be run without load*

A = Foot mount. B = Flange mount

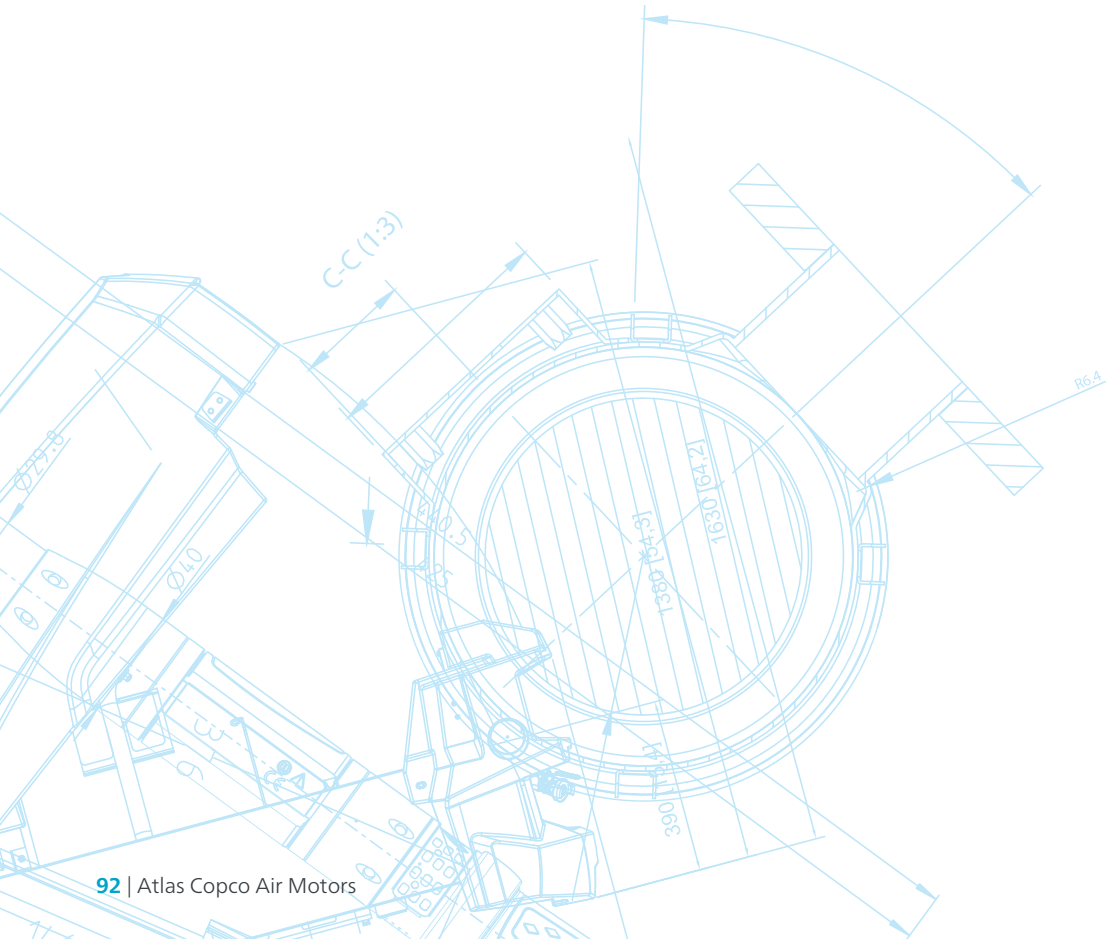

Air motor LZL35 with helical gear units type BF: Performance curves at air pressure 6.3 bar (91 psi)

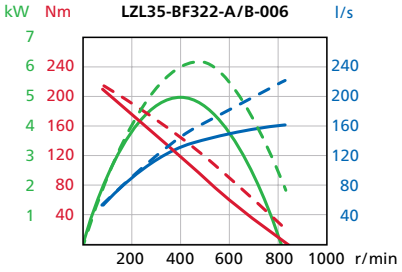

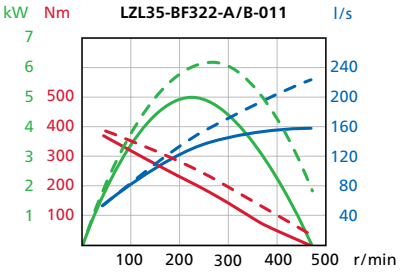

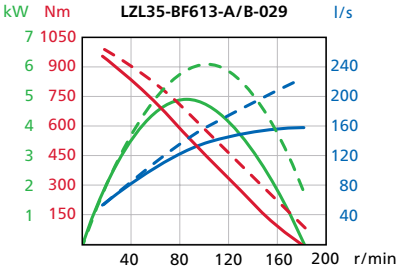

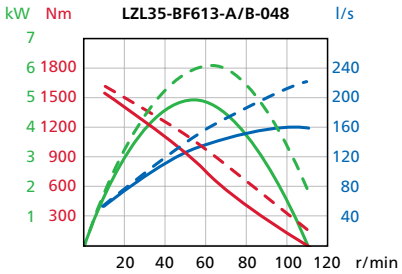

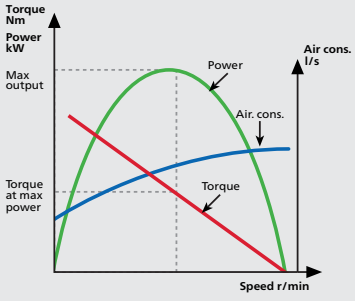

Conversion factors

1 kW	= 1.34 hp
1 Nm	= 0.74 lbf - ft
1 l/s	= 2.1 cfm
1 hp	= 0.75 kW
1 lbf-ft	= 1.36 Nm
1 cfm	= 0.47 l/s

For information about performance curves, see page 6.

Performance with restrictors

Performance without restrictors, (unrestricted)

Dimensions LZL with helical gear units

Foot models

Conversion factor 1 mm = 0.04 inch

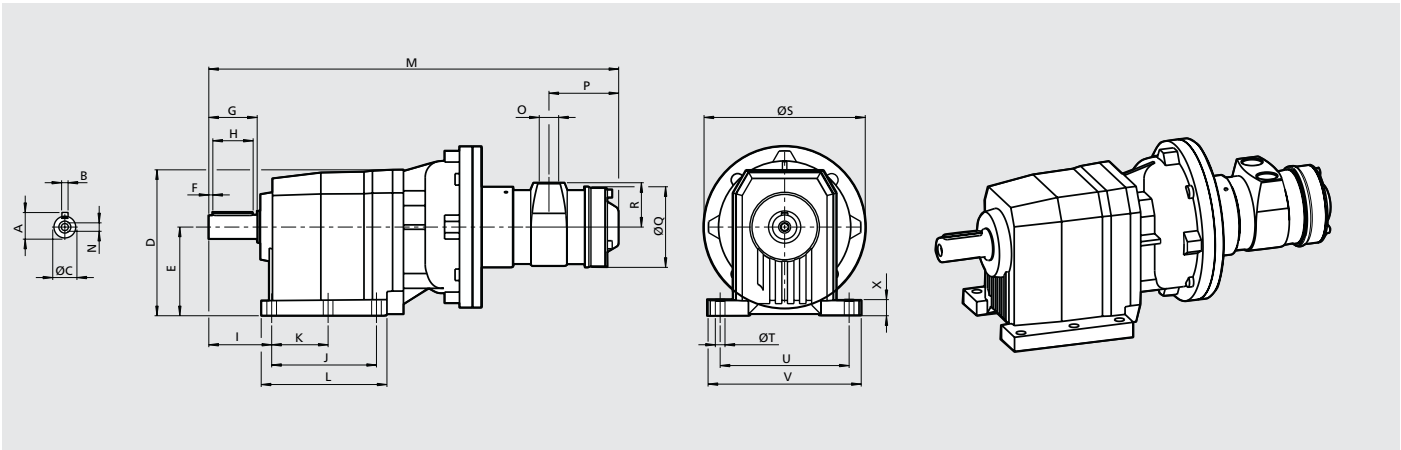

LZL type BF FOOT

Model	A	B	C	D	E	F	G	H	I	J	K	L	M	N	O	P	Q	R	S	T	U	V	X
LZL05-BF322-A-xxx	33	8 h9	30 h6	181	110	5.0	60	50	78	130	70	156	459.5	M10x22	BSP 1/2	71	Ø76	42	Ø160	Ø11	160	190	20
LZL05-BF363-A-xxx	38	10 h9	35 h6	206	115	5.0	70	60	93.5	130	N/A	168	478	M10x22	BSP 1/2	71	Ø76	42	Ø160	Ø14	170	205	16
LZL15-BF322-A-xxx	33	8 h9	30 h6	181	110	5.0	60	50	78	130	70	156	509	M10x22	BSP 3/4	86.5	Ø100	55	Ø200	Ø11	160	190	20
LZL15-BF363-A-xxx	38	10 h9	35 h6	206	115	5.0	70	60	93.5	130	N/A	168	527.5	M10x22	BSP 3/4	86.5	Ø100	55	Ø200	Ø14	170	205	16
LZL15-BF613-A-xxx	53.5	14 h9	50 h6	316	195	5.0	100	90	125	180	N/A	232	617	M16x36	BSP 3/4	86.5	Ø100	55	Ø200	Ø18	250	300	25
LZL25-BF322-A-xxx	33	8 h9	30 h6	181	110	5.0	60	50	78	130	70	156	547.5	M10x22	BSP 1	103	Ø120	62	Ø200	Ø11	160	190	20
LZL25-BF363-A-xxx	38	10 h9	35 h6	206	115	5.0	70	60	93.5	130	N/A	168	566	M10x22	BSP 1	103	Ø120	62	Ø200	Ø14	170	205	16
LZL25-BF613-A-xxx	53.5	14 h9	50 h6	316	195	5.0	100	90	125	180	N/A	232	655.5	M16x36	BSP 1	103	Ø120	62	Ø200	Ø18	250	300	25
LZL35-BF322-A-xxx	33	8 h9	30 h6	181	110	5.0	60	50	78	130	70	156	585.5	M10x22	BSP 1 1/4	119.5	Ø134	68	Ø250	Ø14	160	190	20
LZL35-BF613-A-xxx	53.5	14 h9	50 h6	316	195	5.0	100	90	125	180	N/A	232	692.5	M16x36	BSP 1 1/4	119.5	Ø134	68	Ø250	Ø18	250	300	25

Flange models

Conversion factor 1 mm = 0.04 inch

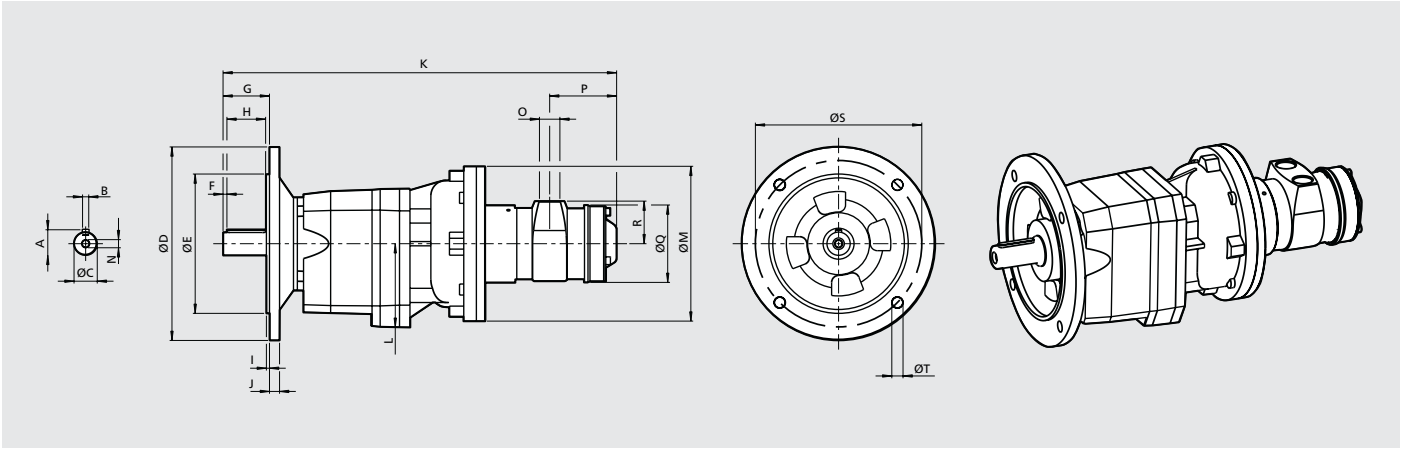

LZL type BF FLANGE

Model	A	B	C	D	E	F	G	H	I	J	K	L	M	N	O	P	Q	R	S	T
LZL05-BF322-B-xxx	33	8 h9	30 h6	Ø250	Ø180 f7	5.0	60	50	4.0	13	459.5	108	Ø160	M10x22	BSP 1/2	71	Ø76	42	Ø215	Ø14
LZL05-BF363-B-xxx	38	10 h9	35 h6	Ø250	Ø180 f7	5.0	70	60	4.0	14	478	111	Ø160	M10x22	BSP 1/2	71	Ø76	42	Ø215	Ø14
LZL15-BF322-B-xxx	33	8 h9	30 h6	Ø250	Ø180 f7	5.0	60	50	4.0	13	509	108	Ø200	M10x22	BSP 3/4	86.5	Ø100	55	Ø215	Ø14
LZL15-BF363-B-xxx	38	10 h9	35 h6	Ø250	Ø180 f7	5.0	70	60	4.0	14	527.5	111	Ø200	M10x22	BSP 3/4	86.5	Ø100	55	Ø215	Ø14
LZL15-BF613-B-xxx	53.5	14 h9	50 h6	Ø300	Ø230 f7	5.0	100	90	4.0	16	617	178.5	Ø200	M16x36	BSP 3/4	86.5	Ø100	55	Ø265	Ø14
LZL25-BF322-B-xxx	33	8 h9	30 h6	Ø250	Ø180 f7	5.0	60	50	4.0	13	547.5	108	Ø200	M10x22	BSP 1	103	Ø120	62	Ø215	Ø14
LZL25-BF363-B-xxx	38	10 h9	35 h6	Ø250	Ø180 f7	5.0	70	60	4.0	14	566	111	Ø200	M10x22	BSP 1	103	Ø120	62	Ø215	Ø14
LZL25-BF613-B-xxx	53.5	14 h9	50 h6	Ø300	Ø230 f7	5.0	100	90	4.0	16	655.5	178.5	Ø200	M16x36	BSP 1	103	Ø120	62	Ø265	Ø14
LZL35-BF322-B-xxx	33	8 h9	30 h6	Ø250	Ø180 f7	5.0	60	50	4.0	13	585.5	108	Ø250	M10x22	BSP 1 1/4	119.5	Ø134	68	Ø215	Ø14
LZL35-BF613-B-xxx	53.5	14 h9	50 h6	Ø300	Ø230 f7	5.0	100	90	4.0	16	692.5	178.5	Ø250	M16x36	BSP 1 1/4	119.5	Ø134	68	Ø265	Ø14

Explosion preventive guidelines

In addition to the product instructions for air motors, the following guidelines apply to explosion protected air motors

Temperatures

- The maximum surrounding temperature for which the certification is valid is 40°C (104°F)
- 40°C (104°F) is also the maximum allowed temperature of the compressed air when it enters the motor
- If the motor is installed in a equipment, the entire equipment has to correspond to the guidelines 2014/35/EU
- Make sure that the compressed air fulfill our quality demands (quality classes 2.4.3. and 3.4.4 respectively 3.5.4 acc. to ISO/DIS 8573-1)
- Do not exceed maximum pressure of 6.3 bar, or as stated on the motor nameplate. Exceeding the operating pressure can increase the surface temperature due to higher rotating speed and the motor can become an ignition source

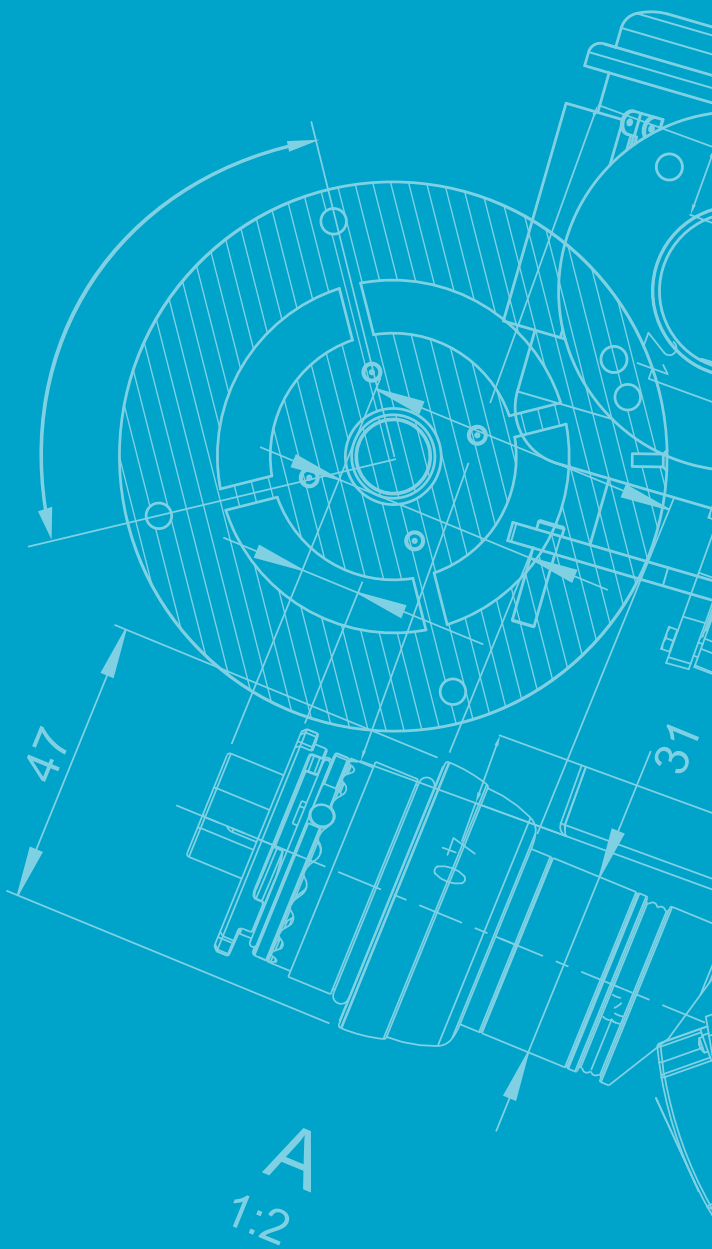
47
31
A
1:2

3 TZB



TURBINE MOTOR

Turbine motor
TZB 25L ¾”output shaft

2.7 - 2.8 Kw
3.6 - 3.8 hp

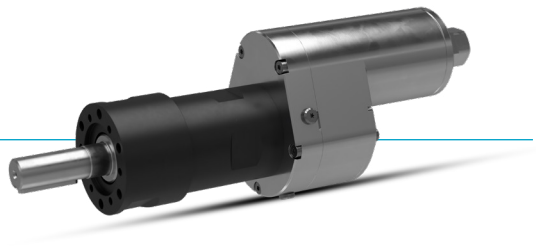

EX certification valid for fixture mounted use only with a maximum surrounding temperature of +60°C (104°F).

Data at air pressure 6.3 bar (91 psi)

Model	Max Output		Speed at max output	Torque at max output		Min starting torque		Stall torque		Free speed	Air consumption at max output		Air consump-tion at Idling		weight		Shaft load-ing code	ATEX code	Ordering No
	Kw	hp	rpm	Nm	lb-ft	Nm	lb-ft	Nm	lb-ft	rpm	l/s	cfm	l/s	cfm	kg	lb			
TZB25-L-A0008-14	2.7	3.6	70	370	270	680	500	700	510	80	40	85	10	20	5.3	11.7	h	EX II 2 GD h T4 IIh T135°C X	8411 3100 16
TZB25-L-A0012-14	2.7	3.6	110	230	170	440	325	460	340	120	40	85	10	20	5.3	11.7	h	EX II 2 GD h T4 IIh T135°C X	8411 3100 24
TZB25-L-A0032-14	2.8	3.8	280	95	70	165	120	170	125	320	40	85	10	20	3.5	7.7	d	EX II 2 GD h T4 IIh T135°C X	8411 3100 32
TZB25-L-A0050-14	2.8	3.8	450	60	45	110	80	110	80	500	40	85	10	20	3.5	7.7	d	EX II 2 GD h T4 IIh T135°C X	8411 3100 40
TZB25-L-AV0008-14	2.7	3.6	70	380	280	680	500	705	520	80	40	85	10	20	5.3	11.7	h	EX II 2 GD h T4 IIh T135°C X	8411 3100 57
TZB25-L-AV0012-14	2.7	3.6	100	270	200	470	345	490	360	115	40	85	10	20	5.3	11.7	h	EX II 2 GD h T4 IIh T135°C X	8411 3100 65
TZB25-L-AV0032-14	2.8	3.8	280	100	75	165	120	170	125	320	40	85	10	20	3.5	7.7	d	EX II 2 GD h T4 IIh T135°C X	8411 3100 73
TZB25-L-AV0053-14	2.8	3.8	470	60	45	100	75	105	75	530	40	85	10	20	3.5	7.7	d	EX II 2 GD h T4 IIh T135°C X	8411 3100 81

Dimensions in mm

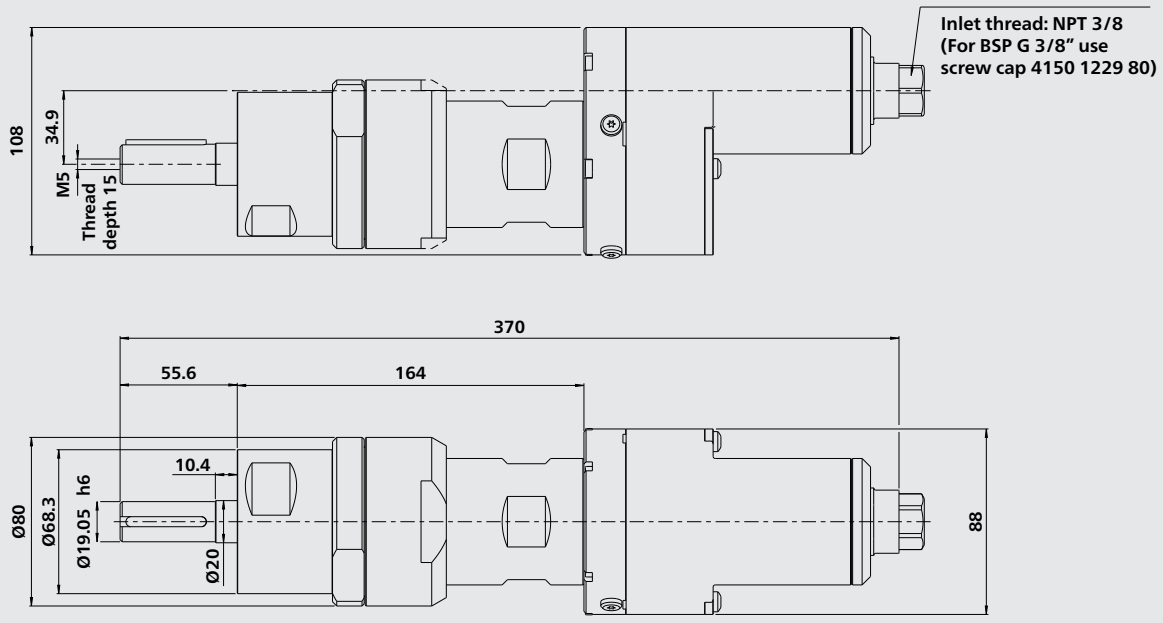

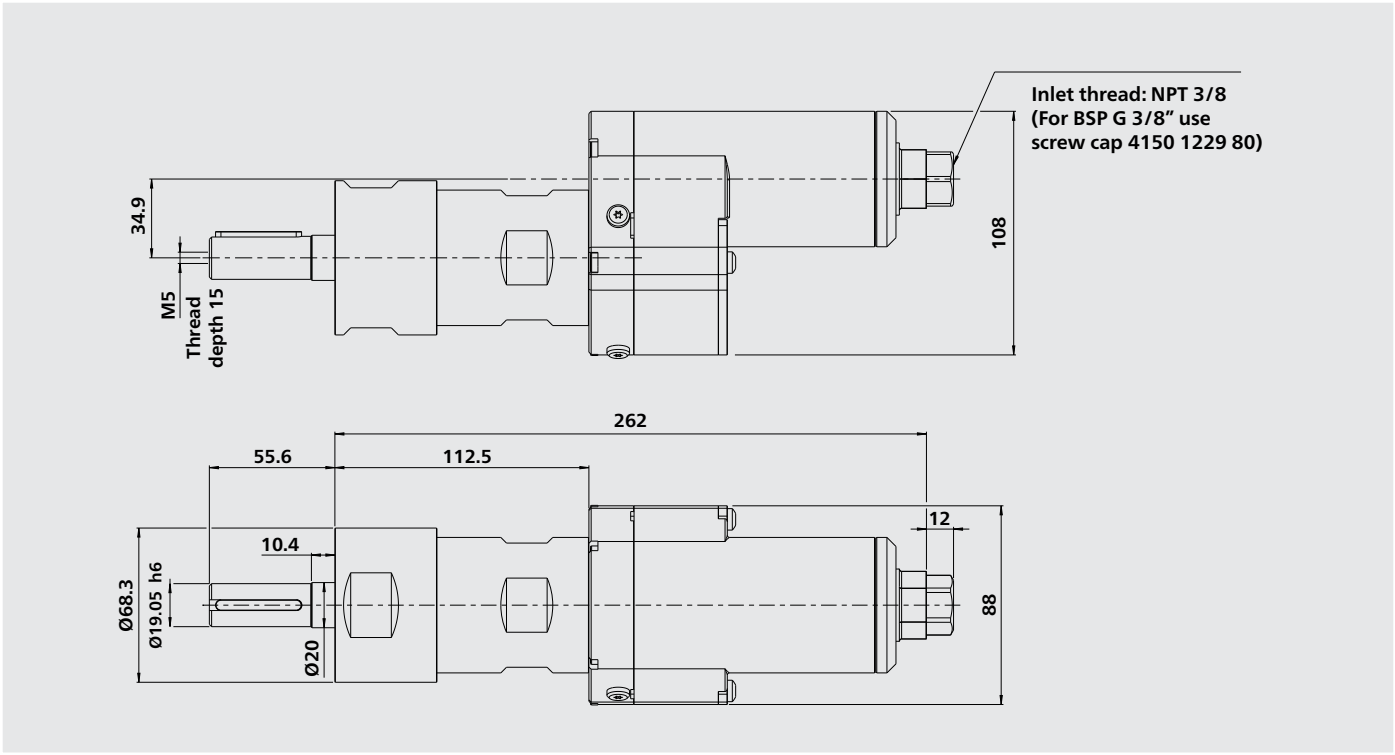

TZB25 : performance curves at air pressure 6,3 bar (91 psi)

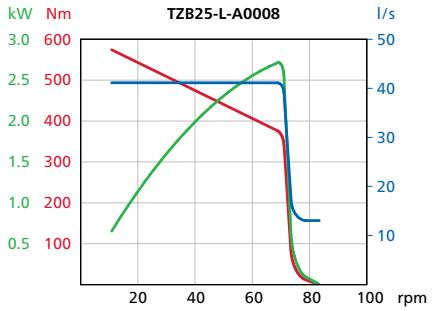

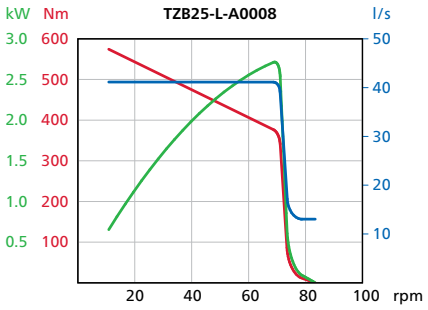

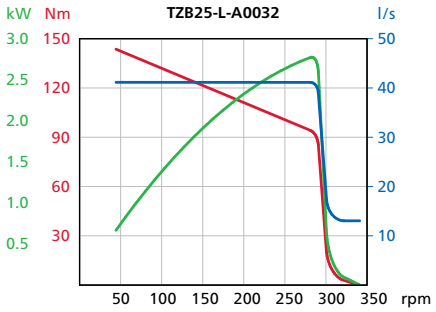

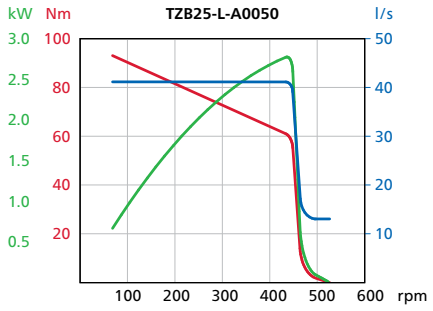

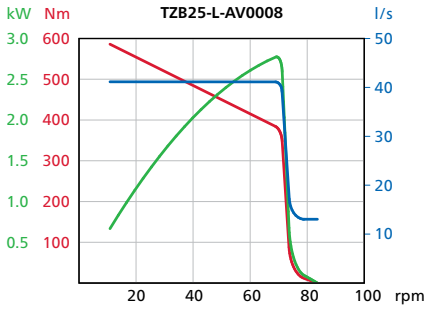

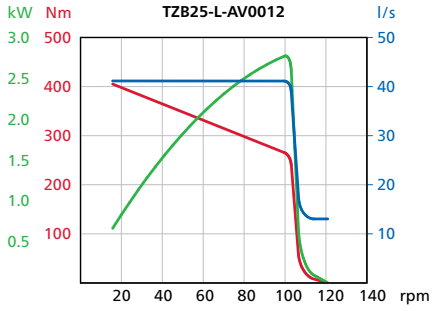

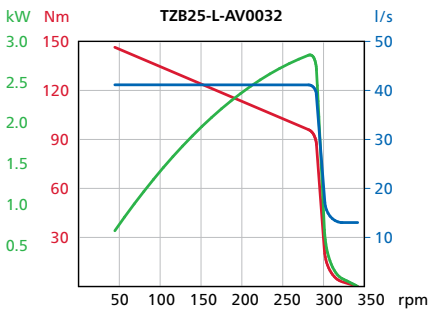

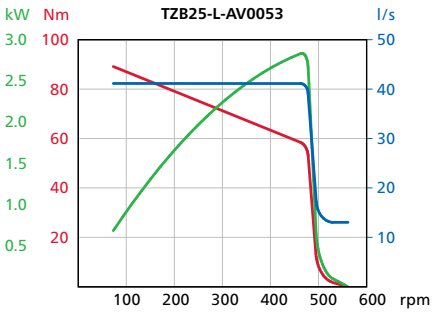

Turbine motor
TZB 25L 1”output shaft

2.7 - 2.8 Kw
3.6 - 3.8 hp



EX certification valid for fixture mounted use only with amaximum surrounding temperature of +60°C (104°F).

Data at air pressure 6.3 bar (91 psi)

Model	Max Output		Speed at max output	Torque at max output		Min starting torque		Stall torque		Free speed	Air consumption at max output		Air consump-tion at Idling		weight		Shaft load-ing code	ATEX code	Ordering No
	Kw	hp	rpm	Nm	lb-ft	Nm	lb-ft	Nm	lb-ft	rpm	l/s	cfm	l/s	cfm	kg	lb			
TZB25-L-A0008-15	2.7	3.6	70	370	270	680	500	700	510	80	40	85	10	20	5.6	12.3	h	EX II 2 GD h T4 IIh T135°C X	8411 3100 17
TZB25-L-A0012-15	2.7	3.6	110	230	170	440	325	460	340	120	40	85	10	20	5.6	12.3	h	EX II 2 GD h T4 IIh T135°C X	8411 3100 25
TZB25-L-A0032-15	2.8	3.8	280	95	70	165	120	170	125	320	40	85	10	20	3.8	8.4	d	EX II 2 GD h T4 IIh T135°C X	8411 3100 33
TZB25-L-A0050-15	2.8	3.8	450	60	45	110	80	110	80	500	40	85	10	20	3.8	8.4	d	EX II 2 GD h T4 IIh T135°C X	8411 3100 41
TZB25-L-AV0008-15	2.7	3.6	70	380	280	680	500	705	520	80	40	85	10	20	5.6	12.3	h	EX II 2 GD h T4 IIh T135°C X	8411 3100 58
TZB25-L-AV0012-15	2.7	3.6	100	270	200	470	345	490	360	115	40	85	10	20	5.6	12.3	h	EX II 2 GD h T4 IIh T135°C X	8411 3100 66
TZB25-L-AV0032-15	2.8	3.8	280	100	75	165	120	170	125	320	40	85	10	20	3.8	8.4	d	EX II 2 GD h T4 IIh T135°C X	8411 3100 74
TZB25-L-AV0053-15	2.8	3.8	470	60	45	100	75	105	75	530	40	85	10	20	3.8	8.4	d	EX II 2 GD h T4 IIh T135°C X	8411 3100 82

Dimensions in mm

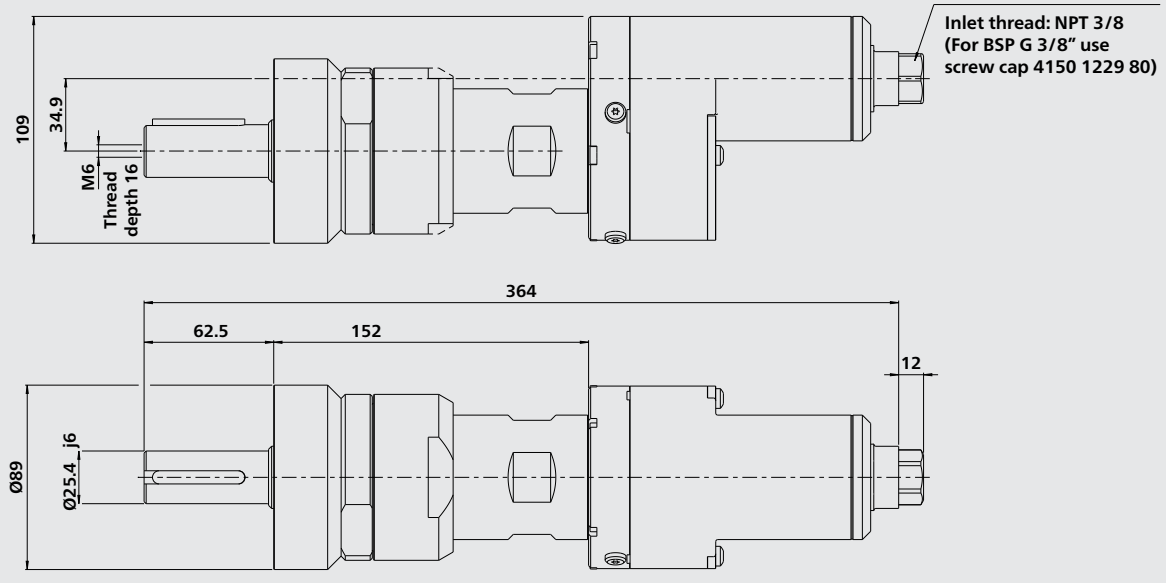

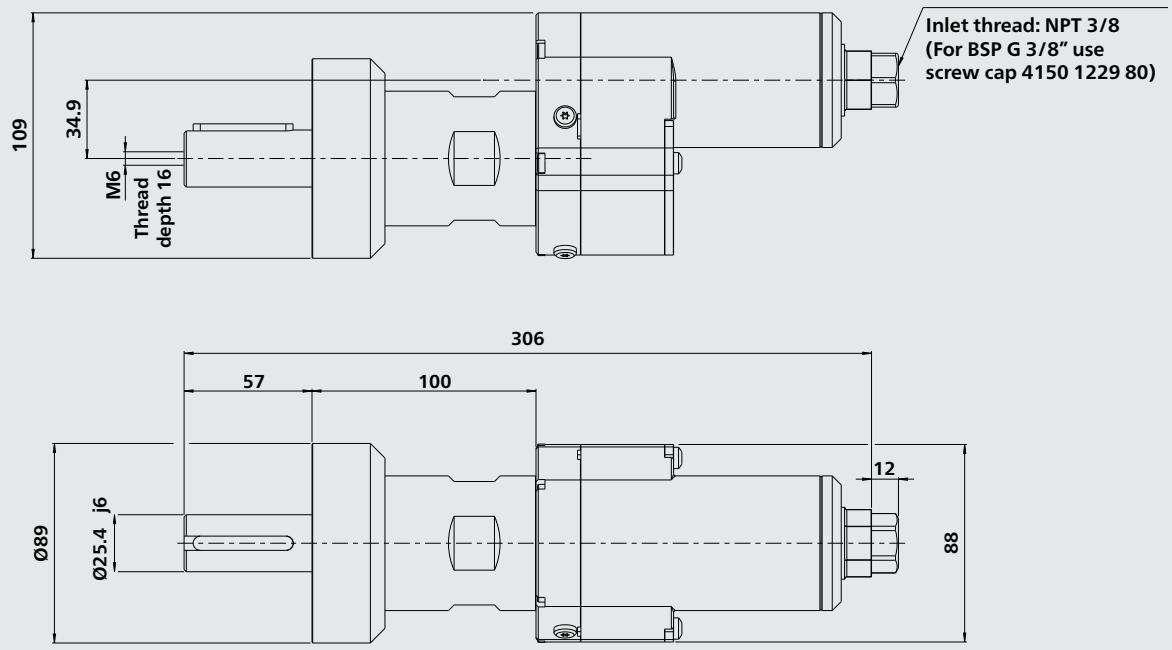
Inlet thread: NPT 3/8
(For BSP G 3/8" use
screw cap 4150 1229 80)
109
34.9
M6
Thread
depth 16
306
57
100
12
Ø89
Ø25.4 j6
88

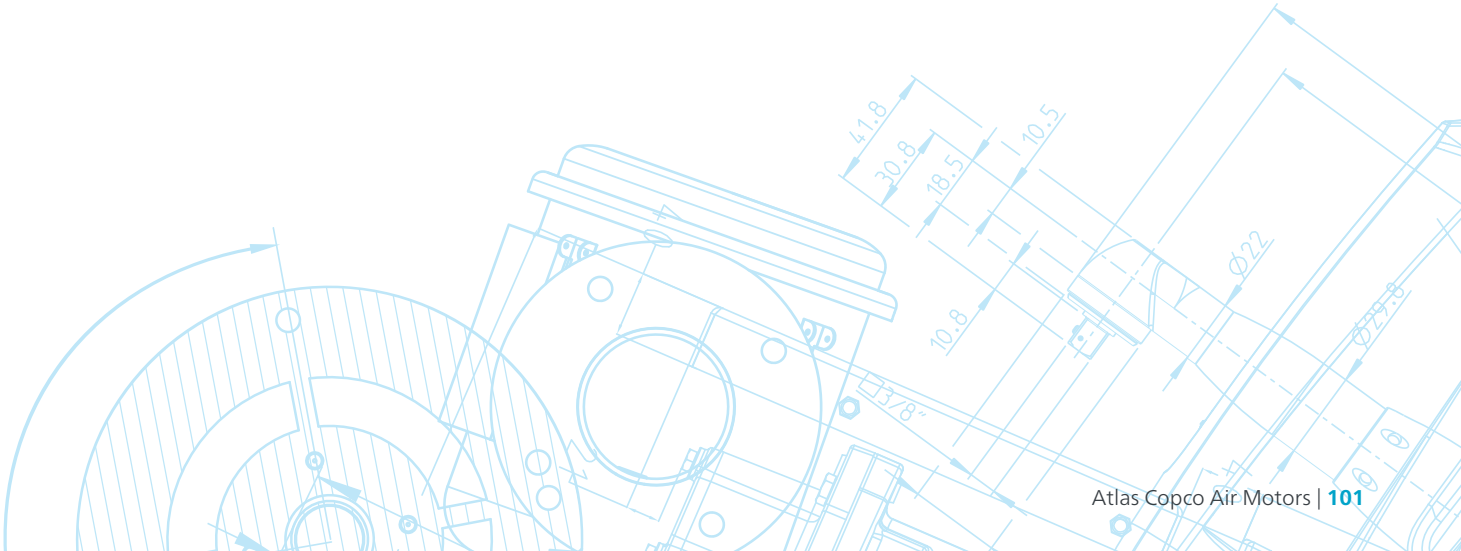
41.8
30.8
18.5
10.5
10.8
Ø22
3/8"

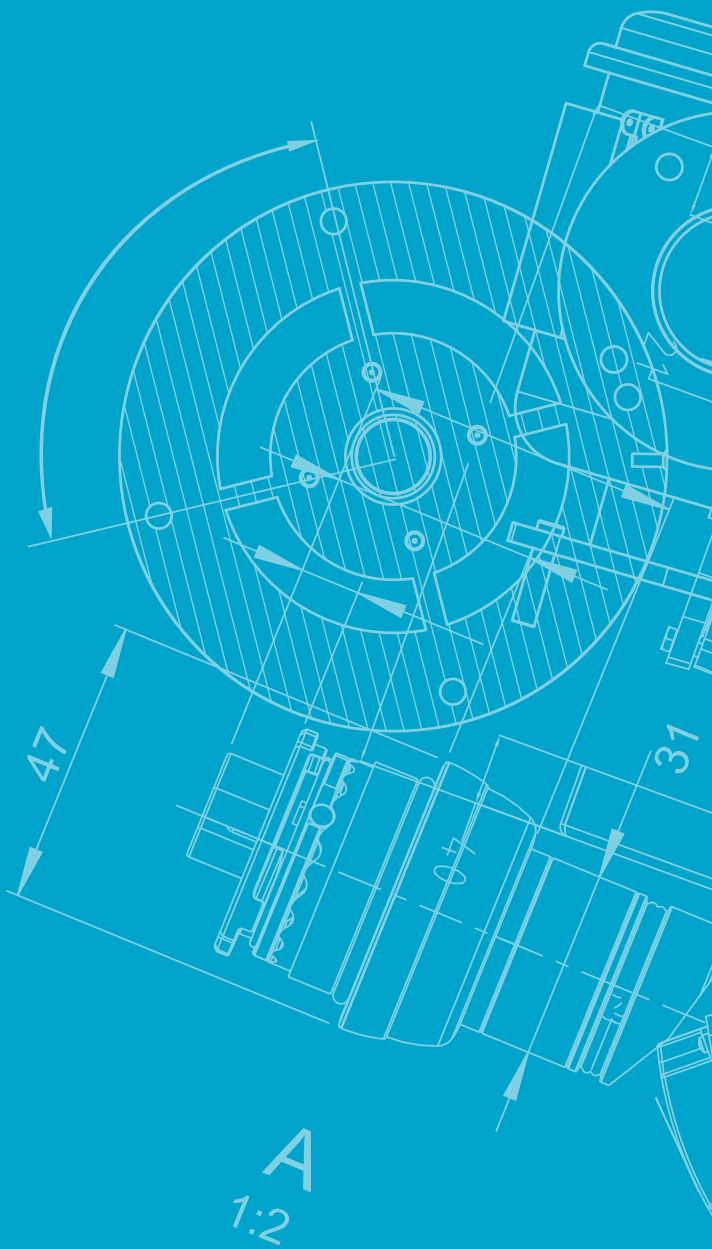
47
31
A
1:2

4 PZB



PISTON MOTOR

Piston motors

PZB09, PZB15, PZB21

0.09 - 0.21 kw
0.12 - 0.28 hp



Model Lubricated	Max output kW	Max output hp	Speed at max output r/min	Torque at max output Nm	Torque at max output lb-ft	Min starting torque Nm	Min starting torque lb-ft	Stall torque Nm	Stall torque lb-ft	Max allowed speed* r/min	Air consumption at max output l/s	Air consumption at max output cfm	Weight kg	Weight lb	Shaft loading code	IP Clas	ATEX code	Ordering No.
PZB09-L-AR500-11	0.09	0.12	379	2.27	1.67	4.5	3.3	4.53	3.34	500	3.0	6.3	1.2	2.64	a	65	Ex II 2GD h T6 IIC T85 °C X	8411 4090 00
PZB09-L-AR500-20	0.09	0.12	379	2.27	1.67	4.5	3.3	4.53	3.34	500	3.0	6.3	1.2	2.64	a	65	Ex II 2GD h T6 IIC T85 °C X	8411 4090 18
PZB09-L-AR500-21	0.09	0.12	379	2.27	1.67	4.5	3.3	4.53	3.34	500	3.0	6.3	1.2	2.64	a	65	Ex II 2GD h T6 IIC T85 °C X	8411 4090 26
PZB09-LE-AR500-11	0.09	0.12	379	2.27	1.67	4.5	3.3	4.53	3.34	500	3.0	6.3	1.2	2.64	c	65	Ex II 2GD h T6 IIC T85 °C X	8411 4090 34
PZB09-L-AR500-22	0.09	0.12	379	2.27	1.67	4.5	3.3	4.53	3.34	500	3.0	6.3	1.2	2.64	a	65	Ex II 2GD h T6 IIC T85 °C X	8411 4090 67
PZB15-L-AR500-11	0.12	0.16	297	3.93	2.9	9.0	6.6	7.87	5.80	500	4.3	9.1	1.4	3.08	a	65	Ex II 2GD h T6 IIC T85 °C X	8411 4150 00
PZB15-L-AR500-20	0.12	0.16	297	3.93	2.9	9.0	6.6	7.87	5.80	500	4.3	9.1	1.4	3.08	a	65	Ex II 2GD h T6 IIC T85 °C X	8411 4150 18
PZB15-L-AR500-21	0.12	0.16	297	3.93	2.9	9.0	6.6	7.87	5.80	500	4.3	9.1	1.4	3.08	a	65	Ex II 2GD h T6 IIC T85 °C X	8411 4150 26
PZB15-L-AR500-22	0.12	0.16	297	3.93	2.9	9.0	6.6	7.87	5.80	500	4.3	9.1	1.4	3.08	a	65	Ex II 2GD h T6 IIC T85 °C X	8411 4150 67
PZB21-L-AR300-11	0.21	0.28	242	8.26	6.09	20.0	14.8	16.52	12.18	300	6.0	12.8	3.5	7.71	b	65	Ex II 2GD h T6 IIC T85 °C X	8411 4210 00
PZB21-L-AR300-20	0.21	0.28	242	8.26	6.09	20.0	14.8	16.52	12.18	300	6.0	12.8	3.5	7.71	b	65	Ex II 2GD h T6 IIC T85 °C X	8411 4210 18
PZB21-L-AR300-21	0.21	0.28	242	8.26	6.09	20.0	14.8	16.52	12.18	300	6.0	12.8	3.5	7.71	b	65	Ex II 2GD h T6 IIC T85 °C X	8411 4210 26
PZB21-LE-AR300-11	0.21	0.28	242	8.26	6.09	20.0	14.8	16.52	12.18	300	6.0	12.8	3.5	7.71	d	65	Ex II 2GD h T6 IIC T85 °C X	8411 4210 34

** Motor without restrictor plates in the air in- and outlet, the motors should not be run above max allowed speed.*

PZB 09-21 : Performance curves at air pressure 6.3 bar (91 psi) and Shaft load curves

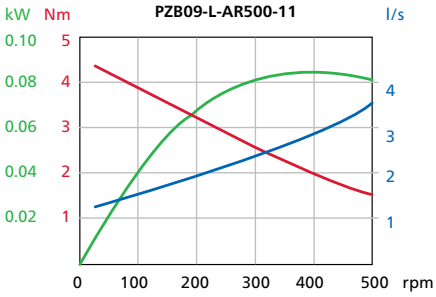

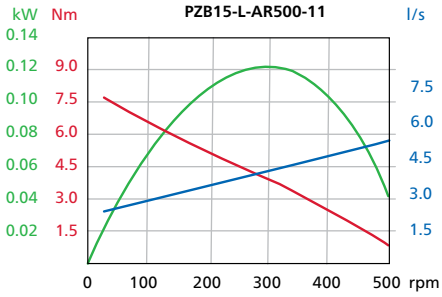

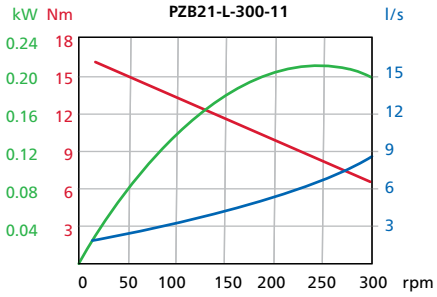

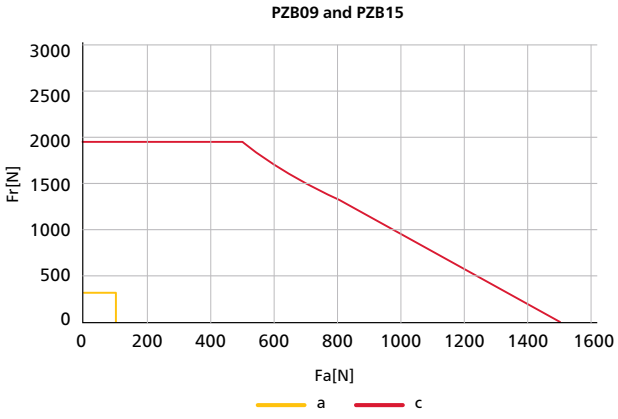

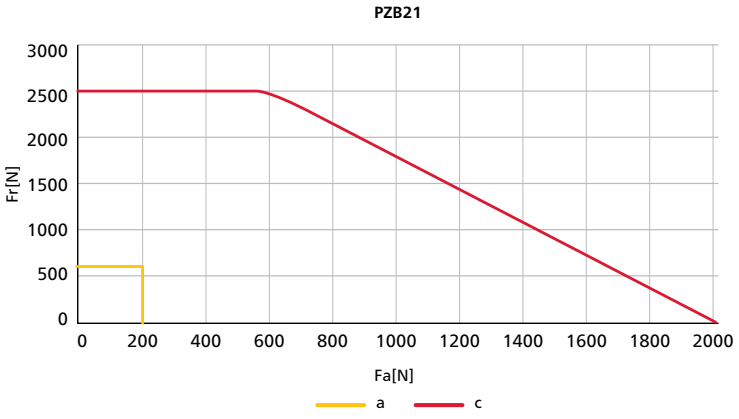

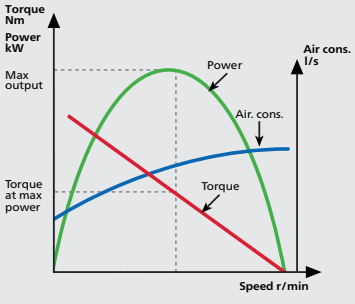

Conversion factors

1 kW	= 1.34 hp
1 Nm	= 0.74 lbf - ft
1 l/s	= 2.1 cfm
1 hp	= 0.75 kW
1 lbf-ft	= 1.36 Nm
1 cfm	= 0.47 l/s

For information about performance curves, see page 6.

Dimensions (mm)

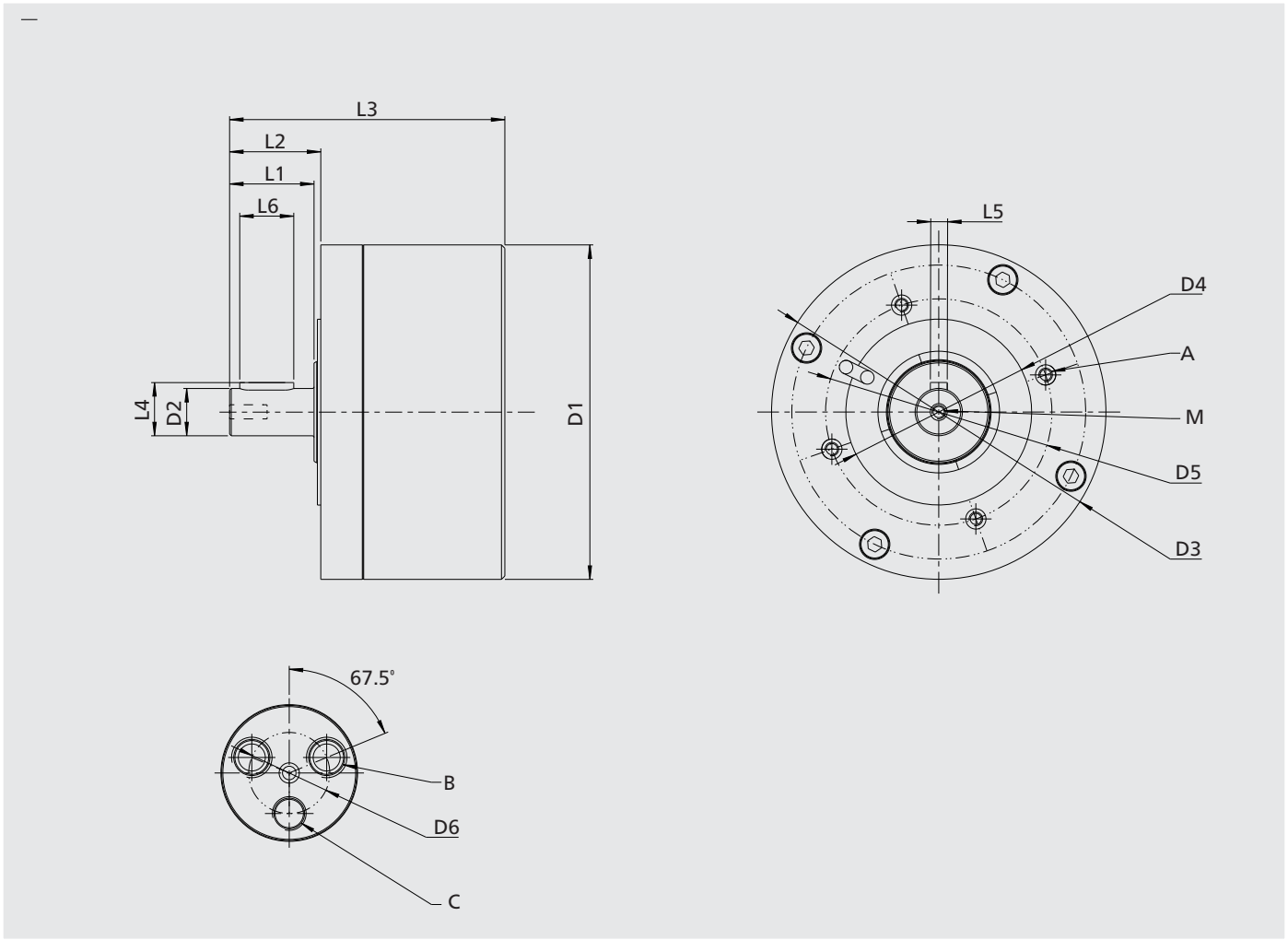

Description	D1	D2	D3	D4	D5	D6	A	B	C	L1	L2	L3	L4	L5	L6	M	Part Number
PZB09 – AC99	Ø99	Ø14	Ø99	Ø55	Ø67	Ø12	M4x9	M6x10	M5x6	25	27	81.5	15.75	5	16	M4x10	8411 4090 00
PZB09 – IEC-FF115	Ø99	Ø14	Ø140	Ø95	Ø115	Ø12	Ø10	M6x10	M5x6	25	24	81.5	15.75	5	16	M4x10	8411 4090 18
PZB09 – NEMA-56C	Ø99	Ø5/8"	Ø6.5"	Ø4.5"	Ø5.875"	Ø12	3/8"-16	M6x10	M5x6	50	2.06"	107.5	17.85	3/16"	1 ¼"	-	8411 4090 26
PZB09 – AC-BF99	Ø99	Ø14	Ø99	Ø55	Ø67	Ø12	M4x9	M6x10	M5x6	25	27	111.5	15.75	5	16	M4x10	8411 4090 34
PZB09 – AC129	Ø99	Ø19	Ø129	Ø95	Ø115	Ø12	M6 & Ø6,7	M6X10	M5X6	40	43.5	98	21.75	6	28	M6x18	8411 4090 67
PZB15 – AC99	Ø99	Ø14	Ø99	Ø55	Ø67	Ø12	M4x9	M6x10	M5x6	25	27	96.5	15.75	5	16	M4x10	8411 4150 00
PZB15 – IEC-FF115	Ø99	Ø14	Ø140	Ø95	Ø115	Ø12	Ø10	M6x10	M5x6	25	24	96.5	15.75	5	16	M4x10	8411 4150 18
PZB15 – NEMA-56C	Ø99	Ø5/8"	Ø6.5"	Ø4.5"	Ø5.875"	Ø12	3/8"-16	M6x10	M5x6	50	2.06"	122.5	17.85	3/16"	1 ¼"	-	8411 4150 26
PZB15 – AC129	Ø99	Ø19	Ø129	Ø95	Ø115	Ø12	M6 & Ø6,7	M6X10	M5X6	40	43.5	113	21.75	6	28	M6x18	8411 4150 67
PZB21 – AC159	Ø159	Ø19	Ø159	Ø95	Ø115	Ø16	M6x10	G1/8"x10	M5x6	40	43	113.5	21.75	6	28	M6x18	8411 4210 00
PZB21 – IEC-FF115	Ø159	Ø19	Ø240	Ø180	Ø215	Ø16	Ø14,5	G1/8"x10	M5x6	40	39	113.5	21.75	6	28	M6x18	8411 4210 18
PZB21 – NEMA-56C	Ø159	Ø5/8"	Ø6.5"	Ø4.5"	Ø5.875"	Ø16	3/8"-16x10	G1/8"x10	M5x6	50	2.06"	125	17.85	3/16"	1 ¼"	-	8411 4210 26
PZB21 – AC-BF159	Ø159	Ø19	Ø159	Ø95	Ø115	Ø16	M6x10	G1/8"x10	M5x6	40	43	162.5	21.75	6	28	M6x18	8411 4210 34

Note: All figures are in mm, accept standard NEMA dimensions

ATEX code definition

ATEX certificate:

For information about the ATEX certificate, refer to the ATEX Technical File, 9836 4610 00.

If the product is part of an assembly where the components have different ATEX codes, the component with the lowest level of safety defines the ATEX code of the whole assembly.

Description	Value	Definition
Equipment group	I	Mining applications
	II	Surface industry
Equipment category Group I	M1	May continue to operate when a potentially explosive atmosphere is present
	M2	Shall not operate when a potentially explosive atmosphere is present.
Equipment category Group II	1	Very high level of protection • zone 0 (gas) • zone 1 (gas) • zone 2 (gas) • zone 20 (dust) • zone 21 (dust) • zone 22 (dust)
	2	High level of protection • zone 1 (gas) • zone 2 (gas) • zone 21 (dust) • zone 22 (dust)
	3	Normal level of protection • zone 2 (gas) • zone 22 (dust)
Atmosphere	G	Atmosphere containing Gas, Vapors or Mist
	D	Atmosphere containing Dust
Safety design	h	Mechanical product
Type of protection	Ex nL	Explosion protection. Type: “Energy limited apparatus and circuits”
Gas group	IIA	Propane/Acetone/Ammonia
	IIB	Ethylene
	IIC	Hydrogen/Acetylene
Max surface temperature in Gas		T1 = 450°C (848°F) T2 = 300°C (572°F) T3 = 200°C (392°F) T4 = 135°C (275°F) T5 = 100°C (212°F) T6 = 85°C (185°F)
Max surface temperature in Dust		Example temperatures: T85°C (185°F) T110°C (230°F) T120°C (248°F) T125°C (257°F) T240°C (464°F)
Ambient temperature range	Ta	Example: 20°C Ta +40°C

Special motors

Atlas Copco is a premier supplier of air motors, manufactured to individual customer specifications.

Particularly for "OEM" requirements, a customized air motor can be the most efficient solution when integrating an air motor into a machine or tool. Typical examples of special motors are those having unique casing or mounting arrangements, motors utilizing non-standard materials or surface coatings and types designed to achieve a specific output.

Whatever the requirement, Atlas Copco welcomes the opportunity to work with its customers in finding the best solution for their needs.



9833 8998 01 – EN © Atlas Copco AB, Stockholm, Sweden. Production: Atlas Copco Brand Studio.

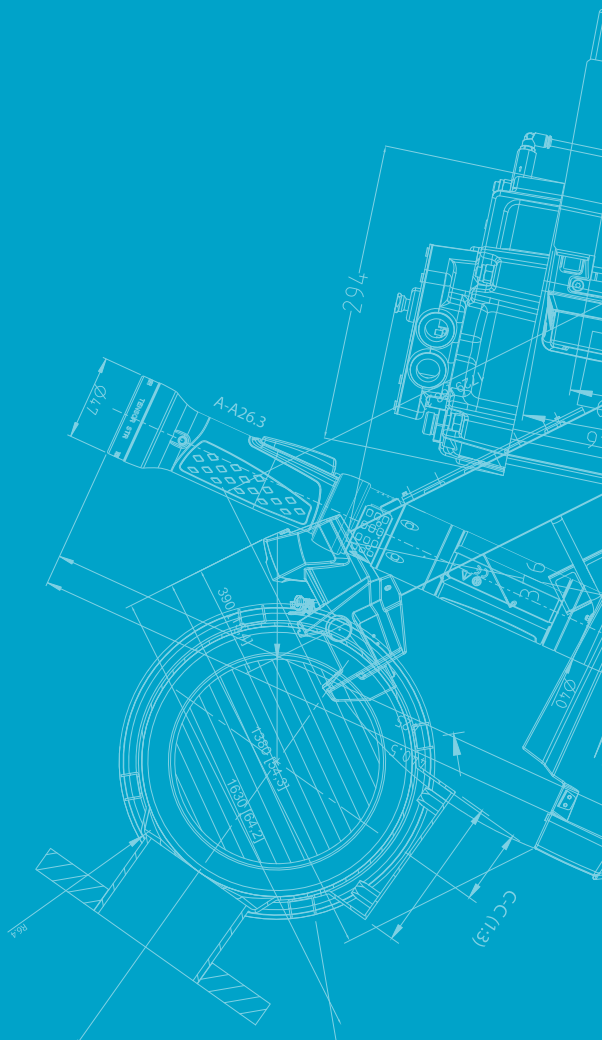

Atlas Copco AB

(publ) SE-105 23 Stockholm, Sweden
Phone: +46 8 743 80 00
Reg. no: 556014-2720

atlascopco.com